Flo-tech

Hydraulic Diagnostic Products

Fixed Position and Portable Equipment



Badger Meter

CONCORD Hydraulics

Catalog

Table of Contents

Portable Hydraulic Testers

General Design Features Page 3
Flo-Check® USB Hydraulic System Analyzer Page 4-5
PFM6 Series Portable Hydraulic Tester Page 6-7
PFM6BD Series Bi-directional Tester Page 8-9
PFM8 Series Digital Tester and Dynamometer Page 10-11
F6100 Series Sensor Arrays with Load Valve Page 12-13
Pressure Drop Charts for Testers Page 14

Turbine Flow Sensors

General Design Features Page 15
Activa™ Sensor Arrays Page 16-17
Ultima Sensor Arrays Page 18-19
Classic Turbine Flow Sensors Page 20-21
Quad Series Turbine Flow Sensors Page 22-23
Pressure Drop Charts for Turbine Flow Sensors Page 24

Accessories

K-Factor Scaler Page 25
Pressure Sensor Page 26
Temperature Sensor Page 27
Cable Assemblies Page 28-29

Diagnostic Test Equipment Page 30

MC4000

Hydraulic Formulas & Viscosity Information Page 31

For Product Details and Requirements Contact:

Concord Hydraulics Pvt Ltd
Mumbai, MH, IN

Telephone: +91-775-795-6524
+91-869-281-0551

E-mail: sales@chpls.com
sales01@chpls.com

Website: www.concordhydraulics.com

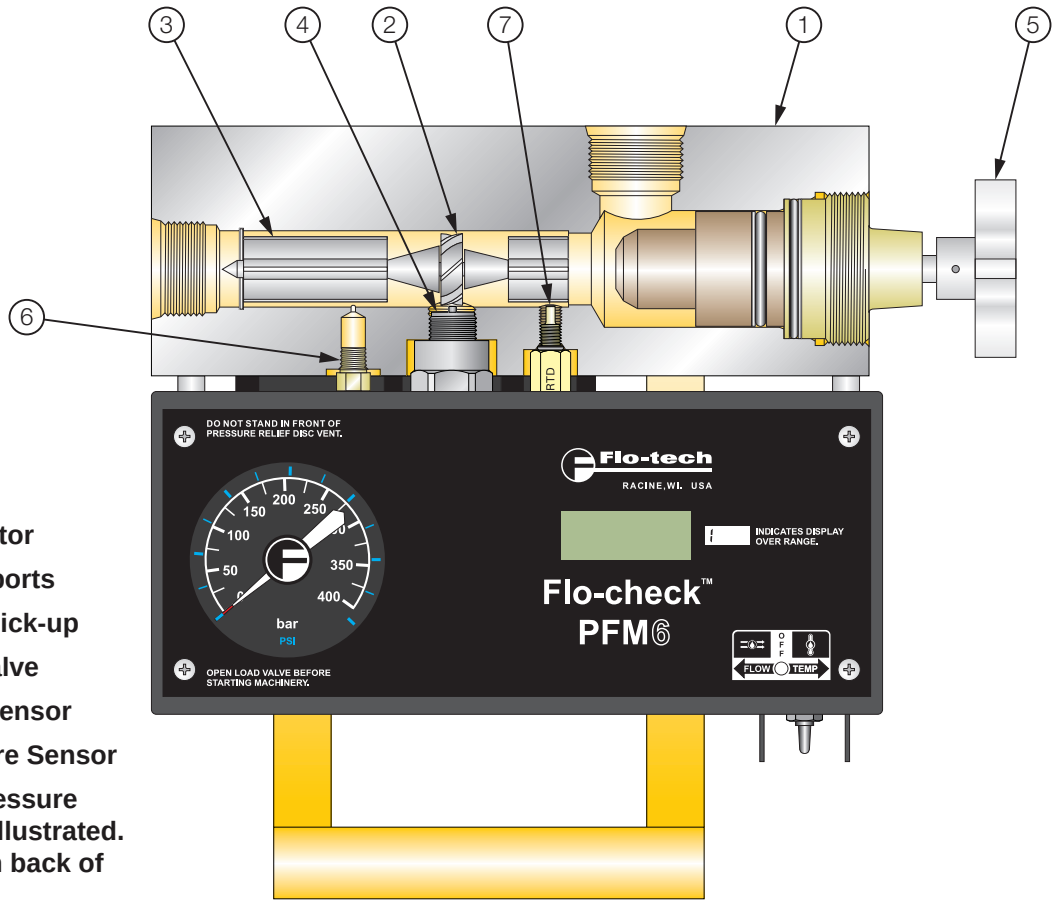

1 – Housing
2 – Turbine Rotor
3 – Rotor Supports
4 – Magnetic Pick-up
5 – Loading Valve
6 – Pressure Sensor
7 – Temperature Sensor
8 – Internal Pressure Relief not illustrated. Located on back of housing.

Operating Principle

Flo-tech's portable hydraulic testers simultaneously measure the flow rate, temperature, pressure and, optionally, power of hydraulic fluid. Designed for testing pumps, valves, cylinders, motors, hydrostatic or power shift transmissions, and power steering systems in both mobile and stationary applications, these compact units utilize turbine flow meter technology.

Flow: As fluid passes through the tester, it turns the turbine rotor. As each turbine blade passes the magnetic pick-up, an electrical signal is generated. This frequency signal is proportional to the flow rate and is transmitted to the tester's electronics for display on a PC screen or the front panel LCD of the tester's electronic case.

Temperature: All testers contain an internal temperature sensor for measuring the temperature of the fluid as it passes through the flow meter body.

Pressure: Pressure is provided in either analog or digital format, depending on the model of the tester. PFM6 and PFM6BD testers are equipped with helical type pressure gauges, while the PFM8 tester includes a silicon strain gauge pressure sensor and the Flo-Check USB tester utilizes a piezoelectric pressure sensor.

Power: Power measurements are derived from the product of flow and pressure. The Flo-Check USB and the PFM8 are designed to calculate this measurement and display the results in either horsepower or kilowatts. When using the PFM6 or PFM6BD, power can be calculated using the following formulas:

$$H.P. = \frac{GPM \times PSI}{1714} \qquad H.P. = \frac{LPM \times Bar}{447.4}$$

$$kW = \frac{LPM \times Bar}{600}$$

Designed for both ease of operation and safety, all testers feature loading valves with fingertip control and pressure surge protection.

Flo-Check® USB Hydraulic System Analyzer

Simultaneously Measures Flow, Pressure and Temperature



- Flow accuracy ±1% of reading @ 32 cSt
- Field selectable US or metric readings
- High and low set point alarms for flow, pressure and temperature
- Captures pressure spikes up to 10,000 PSI (0.2 milliseconds duration)
- Exports saved data to Microsoft Excel® and other spreadsheet programs
- USB powered
- Easy to use, plug and play
- Calculates hydraulic power
- Select continuous monitoring or capture data manually
- Logs up to 12 hours
- Records alarm history

The Flo-Check Hydraulic System Analyzer can be used as a stationary or portable tester for both industrial and mobile hydraulic system diagnostics, and analysis of the prognostic health of a hydraulic system. It features flow, pressure and temperature sensors that are monitored by a data acquisition module. This module records the operating parameters of the system and transfers them to the user's laptop via the USB port.

The custom software utility is a Windows®-based application which is compatible with Windows Vista®, Windows XP, Windows 2000, and Windows 7. This intuitive software configures the displayed information into user-selected engineering units and provides real-time graphics with instantaneous readings and trends for all three measurement parameters. The software also permits the data to be saved for export into a spreadsheet program.

The Hydraulic System Analyzer is powered through the USB port of a PC, making it easy to set up and ideal for portable applications. Interfaced to the PC application, the Hydraulic Analyzer offers a straightforward method of monitoring system parameters complete with data acquisition.



SPECIFICATIONS

Performance

Flow:	
Accuracy	±1% of reading @ 32 cSt
Repeatability	±0.2%
Pressure:	
Accuracy	<±0.5% BFSL
Stability	<±0.25% of full scale
Zero Offset	<±2% of full scale
TC Zero and TC Span	<±1.5% of full scale
Response Time	0.2 milliseconds
Temperature:	
Calibration Error (25 °C)	±1 °C
Absolute Error (over full range of sensor, 0 to 150 °C)	
Without Calibration	±3 °C
With Calibration	±1.6 °C
Nonlinearity	±0.4 °C
Repeatability	±0.1 °C
Data Acquisition:	
Sample Rate	10 kHz
PC Screen Update/Record Rate	
Flow	1 second (average 10K samples)
Temperature	1 second (average 10K samples)
Pressure	1 second (min, max, average 10K samples)

Power

USB Power:	+5 VDC (supplied through USB port of a PC)
USB Voltage Tolerance:	+4.6 VDC min, +5.25 VDC max
Current:	100 mA, typ

Environmental

Pressure Rating:	6000 PSI (414 Bar) maximum with a 3:1 safety factor; capable of 10,000 PSI transients
Operating Pressure:	<6000 PSI (414 Bar, 41.4 MPa, 420 kg/cm²); capable of 10,000 PSI transients
Internal Valve By-pass:	7500 PSI ΔP
Pressure Drop:	See ΔP charts on page 14
Fluid Temperature:	-40 to +300 °F (-40 to +150 °C)
Ambient Temperature:	+32 to +185 °F (0 to +85 °C)
Storage Temperature:	-40 to +185 °F (-40 to +85 °C)
Humidity:	0-90%, non-condensing

Material

Housing:	6013-T351 Aluminum; anodized
Turbine Rotor:	T416 Stainless steel
Rotor Supports:	6061-T6 Aluminum alloy
Seals:	Viton® standard; EPR optional
Ball Bearings:	440C Stainless steel
Hub Cones:	6061-T6 Aluminum alloy
Temperature Probe:	T303 Stainless steel
Valve:	12L14 Steel body with 303 SS seat
Spool/Sleeve:	12L14 Steel
Magnetic Pick-up:	
Body	T303 Stainless Steel
Nut	T303 Stainless Steel
Electronic Case:	Cold rolled steel; black zinc plate with clear seal
Ports:	SAE Straight thread O-ring boss, female, J1926/1; ISO1179 (BSPP)

Flo-Check® USB Hydraulic System Analyzer

Simultaneously Measures Flow, Pressure and Temperature

SOFTWARE



The Flo-tech Analyzer software provides a real-time graphical and digital interface for monitoring and/or recording pressure, temperature and flow rate parameters from the Hydraulic Analyzer. In addition to the graphical and digital displays, the main screen also consists of a menu bar, buttons with common functions and alarm indicators.

The software offers the following options:

- View real time pressure, temperature, flow rate and power measurements
- Record all measurements to a file
- Choice of recording all measurement points or capturing points manually
- Selection of all measurement units, US or metric
- Ability to adjust display of graph data
- High/Low alarm indicators set by the operator

All measurements taken can be saved once per second to a comma separated value (.csv) file for export into a spreadsheet program. For example, recording for 2 minutes would yield 120 points of data. Even though data points are only recorded once per second, pressure spikes and dips are captured by recording the maximum or minimum pressure during each measurement period. Therefore, the precise shape of the pressure spike is not recorded but its amplitude and the time it occurred are both recorded.

Measurement (over a 1 second time period)	Color Indication	Alarm Indication	Digital Indication	Graphical Display	Record to File
Average Pressure	Green	●	●	●	●
Minimum Pressure	Dark Green			●	●
Maximum Pressure	Dark Green			●	●
Average Temperature	Blue	●	●	●	●
Average Flow Rate	Yellow	●	●	●	●
Average Power	Orange		●		●

Graphs

The graph on the main screen contains more than 60 points of data. Previous data points are saved in memory and can be viewed at any time. Adjustments can be made to optimize data that is displayed by hiding individual graph plots, adjusting the scale of each plot or adding horizontal gridlines to the graph.

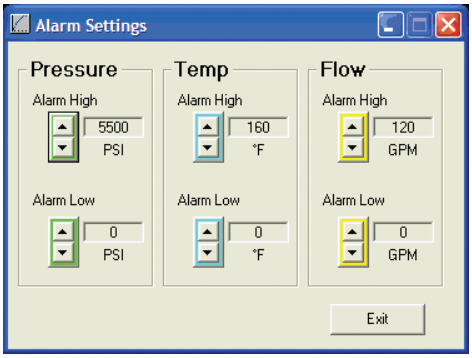

Alarms

There are three sets of High/Low alarm indicators on the main screen which monitor pressure, temperature and flow rate. Alarm indicators flash if the current system measurements exceed the alarm limits set by the operator and continue to flash when the current system measurements return to normal to alert the operator that an alarm condition occurred. Alarms must be reset manually to acknowledge the alarm condition.

ORDERING INFORMATION

MODEL NUMBER[1]	NOMINAL PORT SIZE	FLOW RANGE
F7160	SAE 16	3 - 85 GPM
F7161	SAE 24	7 - 199.9 GPM
F7162	G 1	15 - 321 LPM
F7163	G 1-1/2	26 - 757 LPM

[1] Each Flo-Check Hydraulic System Analyzer includes a 16.4 ft. (5 M) USB, A male to B male (IP 68) connection cable, CD-Rom of the software utility, and complete operating instructions packaged in a protective carrying case.



ACCESSORIES

MODEL NUMBER	DESCRIPTION
F001109	5-Point Calibration Certificate [2]
F001110	10-Point Calibration Certificate [2]

MODEL NUMBER	DESCRIPTION
F1614-7500	Pressure Relief Disc, 7500 PSI (1 per Tester)

[2] Certificates are traceable to NIST, ISO 9001.

PFM6 Digital Portable Hydraulic Tester

Simultaneously Measures Flow, Pressure and Temperature



- Five flow ranges
- Large 3-1/2 digit LCD for flow and temperature
- Helical tube pressure gauge
- One toggle switch to control power and select flow and temperature
- Loading valve with fingertip control of pressure
- Platinum resistance temperature sensor
- Pressure surge protection with internal pressure relief
- Turbine flow sensor provides fast response
- Available with SAE or BSPP ports
- Pressures up to 6000 PSI (414 Bar)
- Temperatures up to 300 °F (150 °C)
- Flow accuracy ±1% of full scale
- Repeatability ±0.2%

The PFM6 Series is a compact, lightweight portable tester designed for fast diagnostic troubleshooting of all types of mobile or stationary hydraulic systems and components. These self-contained testers feature laboratory accuracy and provide flow, pressure and temperature measurements simultaneously from one point.

Simple operation includes a toggle switch to display either flow or temperature readings and a loading valve that operates with fingertip control. The dual scale helical tube pressure gauge offers pulsation dampening and high overpressure capacity. For safe operation, all testers include an internal pressure relief system.

SPECIFICATIONS

Performance

Flow Accuracy:	±1% of full scale
Repeatability:	±0.2%
Turbine Response:	≤200ms
Temperature:	
Fluid	-4 to +300 °F (-20 to +150 °C)
Ambient	-4 to +131 °F (-20 to +55 °C)
Flow Readout:	Linearity and zero shift ±1 digit
Operating Pressure:	up to 6000 PSI (414 Bar, 41.4 MPa, 420 kg/cm^2)
Pressure Drop:	See ΔP charts on page 14
Readout Accuracy:	±1 digit

Material

Housing:	6013-T651 Aluminum; anodized
Turbine Rotor:	T416 Stainless steel
Ball Bearings:	440C Stainless steel
Rotor Shaft:	T303 Stainless steel
Rotor Supports:	
PFM6-15/30	CA360 Brass
PFM6-60/85/200	6061-T6 Aluminum alloy
Hub Cones:	6061-T6 Aluminum alloy
Valve Body:	
PFM6-15/30	Cold rolled steel; zinc plate, dichromate finish
PFM6-60/85/200	12L14 Steel; zinc plate, dichromate finish
Valve Stem:	T303 Stainless steel
Poppet:	12L14 Steel; hardened
Sleeve:	
PFM6-200 only	D.O.M. steel tube
Temperature Probe:	T303 Stainless steel
Magnetic Pick-up:	
Body	T303 Stainless Steel
Nut	T303 Stainless Steel
Seals:	Buna N standard; Viton® and EPR optional
Carrying Handle:	Cast aluminum; anodized
Electronic Case & Cover:	Cold rolled steel; zinc plate with clear seal, epoxy black paint
Battery:	4 AA size alkaline, ~ 50 hours of service
Ports:	SAE Straight thread O-ring boss, female J1926/1; ISO1179 (BSPP)

PFM6 Digital Portable Hydraulic Tester

Simultaneously Measures Flow, Pressure and Temperature

DIMENSIONS

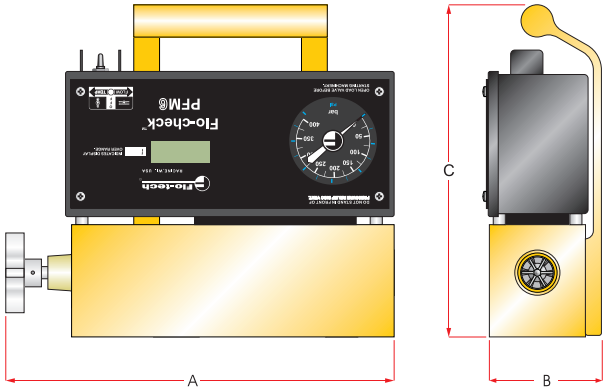

SERIES	A LENGTH IN (mm)	B DEPTH IN (mm)	C HEIGHT IN (mm)	WEIGHT LBS (KG)
PFM6-15	11.3 (287)	3.6 (92)	10.3 (262)	13.85 (6.3)
PFM6-30	11.3 (287)	3.6 (92)	10.3 (262)	13.85 (6.3)
PFM6-60	11.5 (292)	3.6 (92)	10.3 (262)	16.50 (7.5)
PFM6-85	11.5 (292)	3.6 (92)	10.3 (262)	16.50 (7.5)
PFM6-200	12.3 (311)	4.1 (105)	10.8 (275)	20.00 (9.1)

ORDERING INFORMATION

SERIES	NOMINAL PORT SIZE	FLOW RANGE	MODEL NUMBER	STD or CE MODEL	PRESSURE GAUGE UNITS OF MEASURE
PFM6-15	SAE 12	1 - 15 GPM	**F5080 * - XXX**	Leave blank for standard model or **CE** for CE option	**PSI** **BAR** **MPA** **KG/CM2**
PFM6-30	SAE 12	2 - 30 GPM	**F5079 * - XXX**		
PFM6-60	SAE 16	3 - 60 GPM	**F5078 * - XXX**		
PFM6-85	SAE 16	4 - 85 GPM	**F5077 * - XXX**		
PFM6-200	SAE 24	7 - 199.9 GPM	**F5076 * - XXX**		
PFM6-15	G 3/4	4 - 56 LPM	**F5110 * - XXX**		
PFM6-30	G 3/4	7.5 - 113.6 LPM	**F5111 * - XXX**		
PFM6-60	G 1	12 - 227 LPM	**F5112 * - XXX**		
PFM6-85	G 1	15 - 321 LPM	**F5113 * - XXX**		
PFM6-200	G 1-1/2	26 - 757 LPM	**F5114 * - XXX**		

Examples:

F5076-PSI = PFM6-200
SAE 24 ports
7 - 199.9 GPM flow range
Standard model
PSI pressure units

F5111CE-BAR = PFM6-30
G 3/4 ports
7.5 - 113.6 LPM flow range
CE certified
Bar pressure units

ACCESSORIES

MODEL NUMBER	DESCRIPTION	SERIES
F4934-1530	Carrying Case	PFM6-15 & PFM6-30
F4934-6085	Carrying Case	PFM6-60 & PFM6-85
F4934-200	Carrying Case	PFM6-200
F1614-7500	Pressure Relief Disc, 7500 PSI (1 per Tester)	All PFM6s
F001109	5-Point Calibration Certificate[1]	All PFM6s
F001110	10-Point Calibration Certificate[1]	All PFM6s

[1] Certificates are traceable to NIST, ISO 9001.

PFM6BD Bi-Directional Hydraulic Tester

Simultaneously Measures Flow, Pressure and Temperature



- Bi-directional in-line testing capabilities in three flow ranges
- Large 3-1/2 digit LCD for flow and temperature
- Helical tube pressure gauge
- One toggle switch to control power and select flow and temperature
- Loading valve with fingertip control of pressure
- Platinum resistance temperature sensor
- Pressure surge protection with internal pressure relief
- Turbine flow sensor provides fast response
- SAE ports
- Pressures up to 6000 PSI (414 Bar)
- Temperatures up to 300 °F (150 °C)
- Flow accuracy ±1% of full scale
- Repeatability ±0.2%

The PFM6BD Series includes all the features of the standard PFM6 Series with the added benefit of bi-directional flow measurement. Designed for fast diagnostic troubleshooting of all types of mobile or stationary hydraulic systems and components, these compact testers offer laboratory accuracy and provide flow, pressure and temperature measurements simultaneously from one point.

SPECIFICATIONS

Performance

Flow Accuracy:	
Forward	±1% of full scale
Reverse	±2% of full scale
Repeatability:	±0.2%
Turbine Response:	≤200ms
Temperature:	
Fluid	-4 to +300 °F (-20 to +150 °C)
Ambient	-4 to +131 °F (-20 to +55 °C)
Flow Readout:	Linearity and zero shift ±1 digit
Operating Pressure:	up to 6000 PSI (414 Bar, 41.4 MPa, 420 kg/cm^2)
Pressure Drop:	See ΔP charts on page 14
Readout Accuracy:	±1 digit

Material

Housing:	6013-T651 Aluminum; anodized
Turbine Rotor:	T416 Stainless steel
Ball Bearings:	440C Stainless steel
Rotor Shaft:	T303 Stainless steel
Rotor Supports:	6061-T6 Aluminum alloy
Hub Cones:	6061-T6 Aluminum alloy
Valve Body:	12L14 Steel; zinc plate, dichromate finish
Valve Stem:	T303 Stainless steel
Spool/Sleeve:	4340 Alloy steel; hardened
Temperature Probe:	T303 Stainless steel
Magnetic Pick-up:	
Body	T303 Stainless Steel
Nut	T303 Stainless Steel
Seals:	Buna N standard; Viton® and EPR optional
Carrying Handle:	Cast aluminum; anodized
Electronic Case & Cover:	Cold rolled steel; zinc plate with clear seal, epoxy black paint
Battery:	4 AA size alkaline, ~ 50 hours of service

Ports:	SAE Straight thread O-ring boss, female J1926/1

PFM6BD Bi-Directional Hydraulic Tester

Simultaneously Measures Flow, Pressure and Temperature

DIMENSIONS

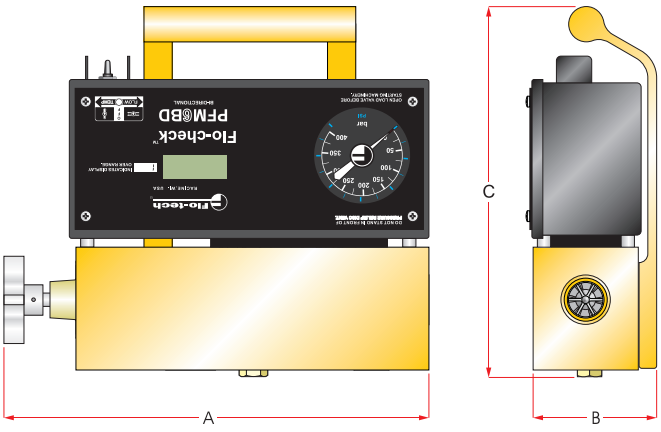

SERIES	A LENGTH IN (mm)	B DEPTH IN (mm)	C HEIGHT IN (mm)	WEIGHT LBS (KG)
PFM6BD-60	11.3 (287)	3.6 (92)	10.4 (265)	16.50 (7.5)
PFM6BD-85	11.3 (287)	3.6 (92)	10.4 (265)	16.50 (7.5)
PFM6BD-200	11.8 (300)	4.1 (105)	10.9 (277)	19.50 (9.0)

ORDERING INFORMATION

SERIES	NOMINAL PORT SIZE	FLOW RANGE	MODEL NUMBER	STD or CE MODEL	PRESSURE GAUGE UNITS OF MEASURE
PFM6BD-60	SAE 16	3 - 60 GPM (12 - 227 LPM)	**F5082 * - XXX**	Leave blank for standard model or CE for CE option	PSI BAR MPA KG/CM2
PFM6BD-85	SAE 16	4 - 85 GPM (15 - 321 LPM)	**F5083 * - XXX**		
PFM6BD-200	SAE 24	7 - 199.9 GPM (26 - 757 LPM)	**F5084 * - XXX**		

Examples:

F5083-PSI = PFM6BD-85
SAE 16 ports
4 - 85 GPM (15 - 321 LPM)
Standard model
PSI pressure units

F5082CE-PSI = PFM6BD-60
SAE 16 ports
3 - 60 GPM (12 - 227 LPM)
CE certified
PSI pressure units

ACCESSORIES

MODEL NUMBER	DESCRIPTION	SERIES
F4934-6085	Carrying Case	PFM6BD-60 & PFM6BD-85
F4934-200	Carrying Case	PFM6BD-200
F1614-7500	Pressure Relief Disc, 7500 PSI (2 per Tester)	All PFM6BDs
F001109	5-Point Calibration Certificate[1]	All PFM6BDs
F001110	10-Point Calibration Certificate[1]	All PFM6BDs

[1] Certificates are traceable to NIST, ISO 9001.

PFM8 Digital Hydraulic Tester & Dynamometer

Simultaneously Measures Flow, Pressure, Power and Temperature



- Five flow ranges
- Front panel selectable US or metric readings
- Dynamometer reads power (HP & kW) directly
- 3-1/2 digit LCDs for digital display of flow, temperature, pressure and power
- Large easy-to-use membrane switch
- Loading valve with fingertip control of pressure
- Silicon strain gauge pressure sensor
- Platinum resistance temperature sensor
- Pressure surge protection with internal pressure relief
- Turbine flow sensor provides fast response
- Pressures up to 6000 PSI (414 Bar)
- Temperatures up to 300 °F (150 °C)
- Flow accuracy ±1% of full scale
- Repeatability ±0.2%

The all digital PFM8 Series combines a compact, lightweight hydraulic tester and a dynamometer in one unit. Designed for fast diagnostic troubleshooting of all types of hydraulic systems and components, including engine-pump combinations. These testers make all flow, temperature, pressure and power measurements from one point. A bonus feature of this series is the capability to switch from US to metric units of measure in the field.

Each tester utilizes two digital displays, one for flow and temperature and a second display for pressure and power. Simple operation includes a large format membrane switch for on/off control and selection of units of measure to be displayed. A loading valve with fingertip control and an internal pressure relief system are standard features.

SPECIFICATIONS

Performance

Flow Accuracy:	±1% of full scale
Repeatability:	±0.2%
Turbine Response:	≤200ms
Temperature:	
Fluid	-4 to +300 °F (-20 to +150 °C)
Ambient	-4 to +131 °F (-20 to +55 °C)
Flow Readout:	Linearity and zero shift ±1 digit
Operating Pressure:	up to 6000 PSI (414 Bar, 41.4 MPa, 420 kg/cm^2)
Pressure Drop:	See ΔP charts on page 14
Readout Accuracy:	±1 digit

Material

Housing:	6013-T651 Aluminum; anodized
Turbine Rotor:	T416 Stainless steel
Ball Bearings:	440C Stainless steel
Rotor Shaft:	T303 Stainless steel
Rotor Supports:	
PFM6-15/30	CA360 Brass
PFM6-60/85/200	6061-T6 Aluminum alloy
Hub Cones:	6061-T6 Aluminum alloy
Valve Body:	
PFM6-15/30	Cold rolled steel; zinc plate, dichromate finish
PFM6-60/85/200	12L14 Steel; zinc plate, dichromate finish
Valve Stem:	T303 Stainless steel
Poppet:	12L14 Steel; hardened
Sleeve:	
PFM6-200 only	D.O.M. steel tube
Temperature Probe:	T303 Stainless steel
Magnetic Pick-up:	
Body	T303 Stainless Steel
Nut	T303 Stainless Steel
Seals:	Buna N standard; Viton® and EPR optional
Carrying Handle:	Cast aluminum; anodized
Electronic Case & Cover:	Cold rolled steel; zinc plate with clear seal, epoxy black paint
Battery:	AA size alkaline, ~ 50 hours of service

Ports:	SAE Straight thread O-ring boss, female J1926/1

PFM8 Digital Hydraulic Tester & Dynamometer

Simultaneously Measures Flow, Pressure, Power and Temperature

DIMENSIONS

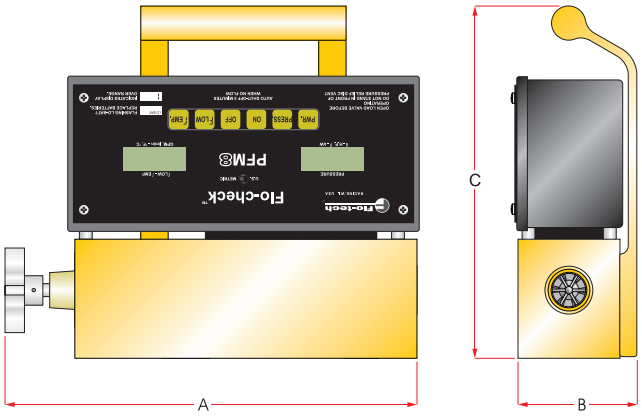

SERIES	A LENGTH IN (mm)	B DEPTH IN (mm)	C HEIGHT IN (mm)	WEIGHT LBS (KG)
PFM8-15	11.3 (287)	3.6 (92)	10.3 (262)	13.85 (6.3)
PFM8-30	11.3 (287)	3.6 (92)	10.3 (262)	13.85 (6.3)
PFM8-60	11.5 (292)	3.6 (92)	10.4 (265)	16.50 (7.5)
PFM8-85	11.5 (292)	3.6 (92)	10.4 (265)	16.50 (7.5)
PFM8-200	12.3 (311)	4.1 (105)	10.9 (277)	20.00 (9.1)

ORDERING INFORMATION

SERIES	NOMINAL PORT SIZE	FLOW RANGE	POWER HP (kW)	MODEL NUMBER
PFM8-15	SAE 12	1 - 15 GPM (4 - 56 LPM)	52.5 (39)	**F5061**
PFM8-30	SAE 12	2 - 30 GPM (7.5 - 113.6 LPM)	105 (78)	**F5058**
PFM8-60	SAE 16	3 - 60 GPM (12 - 227 LPM)	210 (157)	**F5052**
PFM8-85	SAE 16	4 - 85 GPM (15 - 321 LPM)	298 (222)	**F5053**
PFM8-200	SAE 24	7 - 199.9 GPM (26 - 757 LPM)	700 (522)	**F5054**

Examples:

F5061 = PFM8-15
SAE 12 ports
1 - 15 GPM (4 - 56 LPM)

F5053 = PFM8-85
SAE 16 ports
4 - 85 GPM (15 - 321 LPM)

ACCESSORIES

MODEL NUMBER	DESCRIPTION	SERIES
F4934-1530	Carrying Case	PFM8-15 & PFM8-30
F4934-6085	Carrying Case	PFM8-60 & PFM8-85
F4934-200	Carrying Case	PFM8-200
F1614-7500	Pressure Relief Disc, 7500 PSI (1 per Tester)	All PFM8s
F001109	5-Point Calibration Certificate[1]	All PFM8s
F001110	10-Point Calibration Certificate[1]	All PFM8s

[1] Certificates are traceable to NIST, ISO 9001.

Sensor Array with Load Valve

Simultaneously Measures Flow, Pressure and Temperature



- Four flow ranges
- Analog (4-20 mA or 0-5 VDC) or pulse output for flow rate
- Silicon strain gauge pressure sensor with 4-20 mA output
- Platinum resistance temperature sensor with 4-20 mA output
- Loading valve with fingertip control of pressure
- Pressure surge protection
- Turbine flow sensor provides fast response
- Pressures up to 6000 PSI (414 Bar)
- Temperatures up to 300 °F (150 °C)
- Flow accuracy ±1% of reading @ 32 cSt
- Repeatability ±0.2%

The Sensor Array is used for diagnostic evaluation of hydraulic motors, pumps, valves, hydrostatic drives and cylinders. When performed as part of a routine preventative maintenance program, catastrophic or untimely repairs are minimized. All that is required is to make quick and easy fluid line connections between the sensing array and appropriate locations in the hydraulic circuit. The load valve is used to create a restriction so that a relief valve setting or internal leakage of a valve or hydraulic cylinder can be determined. The efficiency of a hydraulic pump or motor can be similarly established and compared to factory specifications.

SPECIFICATIONS

Performance

Flow Accuracy:	±1% of reading @ 32 cSt
Repeatability:	±0.2%
Temperature:	
Fluid	-4 to +300 °F (-20 to +150 °C)
Ambient	-4 to +131 °F (-20 to +55 °C)
Operating Pressure:	up to 6000 PSI (414 Bar, 41.4 MPa, 420 kg/cm^2)
Pressure Drop:	See ΔP charts on page 14

IFC Signal Converter, Option:	**F to I**	**F to V**
Power:	Loop powered, 6V insertion loss max 10 to 30 VDC supply range	10 to 26 VDC
Inputs:	Magnetic Pick-up	Magnetic Pick-up
Frequency	0 to 3500 Hz	0 to 3500 Hz
Trigger Sensitivity	30 mV p-p	30 mV p-p
Frequency Measurement Accuracy	±1%	±1%
Analog Output:	4-20 mA current loop	0-5 VDC
Resolution	1:4000	1:4000
Temperature Drift	50 ppm / °C max	50 ppm / °C max
Response	1.6 seconds min	1.6 seconds min
Environmental:		
Ambient Temperature	-22 to +158 °F (-30 to +70 °C)	-22 to +158 °F (-30 to +70 °C)
Humidity	0-90%, non-condensing	0-90%, non-condensing

Magnetic Pick-up, Option:	
Electrical Output Signal	Self-generating alternating pulse 100 mV RMS (100 Hz) minimum
Pressure Sensor: (optional)	See page 26 for complete specifications
Temperature Sensor: (optional)	See page 27 for complete specifications

Material

Housing:	6013-T651 Aluminum; anodized
Turbine Rotor:	T416 Stainless steel
Ball Bearings:	440C Stainless steel
Rotor Shaft:	T303 Stainless steel
Rotor Supports:	
PFM6-15/30	CA360 Brass
PFM6-85/200	6061-T6 Aluminum alloy
Hub Cones:	6061-T6 Aluminum alloy
Valve Body:	
PFM6-15/30	Cold rolled steel; zinc plate, dichromate finish
PFM6-85/200	12L14 Steel; zinc plate, dichromate finish
Valve Stem:	T303 Stainless steel
Poppet:	12L14 Steel; hardened
Sleeve:	
PFM6-200 only	D.O.M. steel tube
Temperature Probe:	T303 Stainless steel
Magnetic Pick-up:	
Body	T303 Stainless Steel
Nut	T303 Stainless Steel
Seals:	Buna N standard; Viton® and EPR optional
Carrying Handle:	Cast aluminum; anodized
Ports:	SAE Straight thread O-ring boss, female J1926/1; ISO1179 (BSPP)

Sensor Array with Load Valve

Simultaneously Measures Flow, Pressure and Temperature

DIMENSIONS

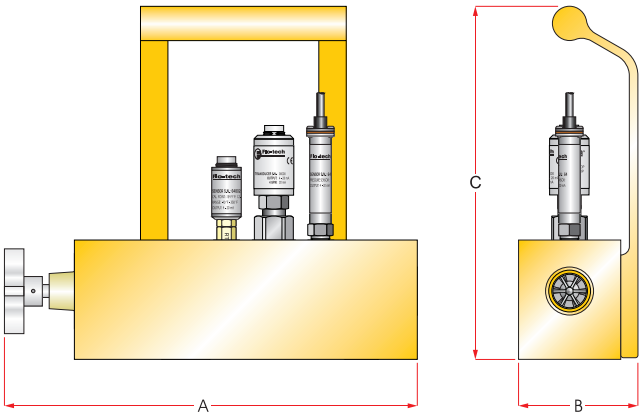

MODEL	A LENGTH IN (mm)	B DEPTH IN (mm)	C HEIGHT IN (mm)	WEIGHT LBS (KG)
F6150 / F6161	11.3 (287)	3.6 (92)	10.3 (262)	13.85 (6.3)
F6153 / F6163	11.3 (287)	3.6 (92)	10.3 (262)	13.85 (6.3)
F6156 / F6165	11.5 (292)	3.6 (92)	10.3 (262)	16.50 (7.5)
F6159 / F6167	12.3 (311)	4.1 (105)	10.8 (275)	20.00 (9.1)

ORDERING INFORMATION

NOMINAL PORT SIZE	FLOW RANGE	MODEL NUMBER	FLOW TRANSDUCER	SEALS	TEMPERATURE	PRESSURE
SAE 12	1 - 15 GPM	F6150	F Frequency (Mag Pick-up) I 4-20 mA Out (IFC) V 0-5 VDC Out (IFC)	B Buna N V Viton® E EPR	T with Sensor G G 1/4 (F) Plugged 0 SAE 2 (J514) Plugged	1 1000 PSI (69 Bar) Sensor 3 3000 PSI (207 Bar) Sensor 5 5000 PSI (345 Bar) Sensor 6 6000 PSI (414 Bar) Sensor G G 1/4 (F) Plugged 0 1/4 NPTF (F) Plugged
SAE 12	2 - 30 GPM	F6153				
SAE 16	4 - 85 GPM	F6156				
SAE 24	7 - 199.9 GPM	F6159				
G 3/4	4 - 56 LPM	F6161				
G 3/4	7.5 - 113.6 LPM	F6163				
G 1	15 - 321 LPM	F6165				
G 1-1/2	26 - 757 LPM	F6167				

Examples:

F6150-IB-T6 = SAE 12 ports
1 - 15 GPM flow range
4-20 mA output
Buna N seals
Temperature sensor
6000 PSI (414 Bar) pressure sensor

F6165-FV-G5 = G 1 ports
15 - 321 LPM flow range
Frequency output
Viton® seals
G 1/4 (F) plugged temp port
5000 PSI (345 Bar) pressure sensor

ACCESSORIES

MODEL NUMBER	DESCRIPTION	SERIES
F1614-7500	Pressure Relief Disc, 7500 PSI (1 per Sensor)	All Sensor Arrays
F001109	5-Point Calibration Certificate[1]	
F001110	10-Point Calibration Certificate[1]	

[1] Certificates are traceable to NIST, ISO 9001.

For information about	Refer to
Digital Displays	Form No. 549
Pressure Sensors	Page 26
Temperature Sensor	Page 27
Cables	Pages 28 & 29

Flow vs Pressure Drop Charts

Flo-Check USB, PFM Series and F6100 Sensor Arrays

PFM6-15, PFM8-15, F6150, F6161

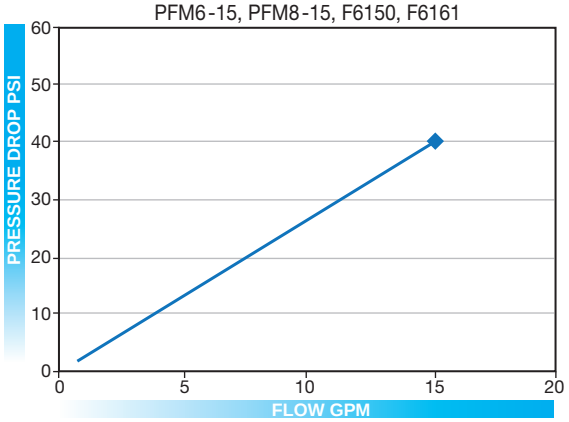

PFM6-30, PFM8-30, F6153, F6163

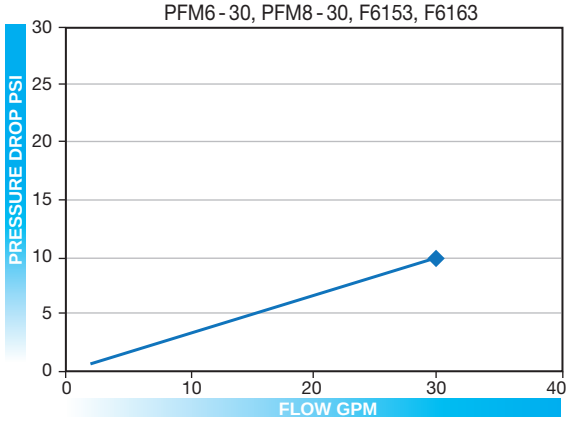

PFM6-60, PFM8-60

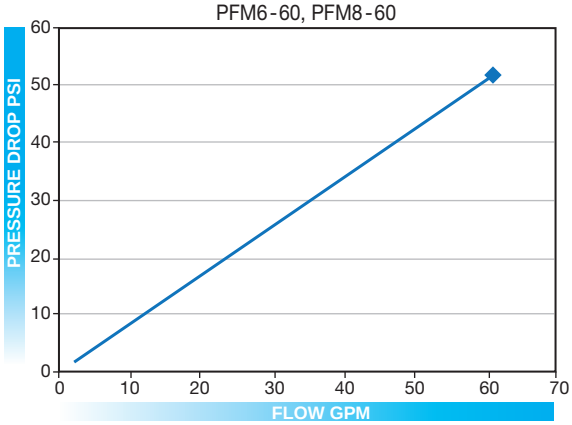

PFM6-85, PFM8-85, F6156, F6165

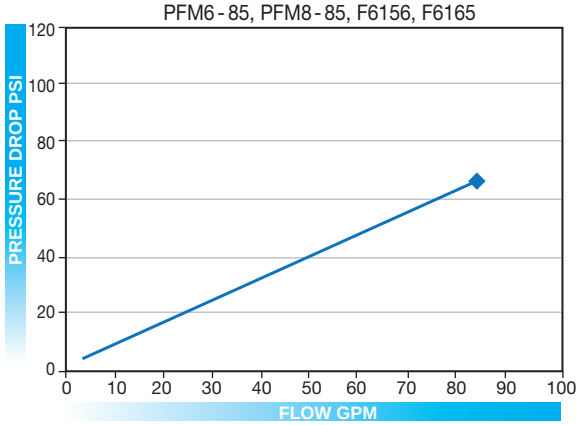

PFM6-200, PFM8-200, F6159, F6167

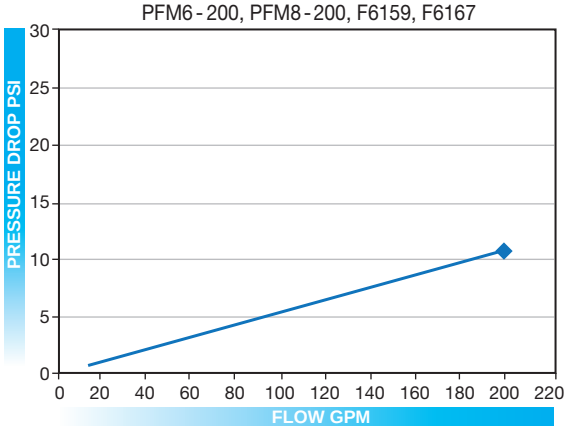

PFM6BD-60

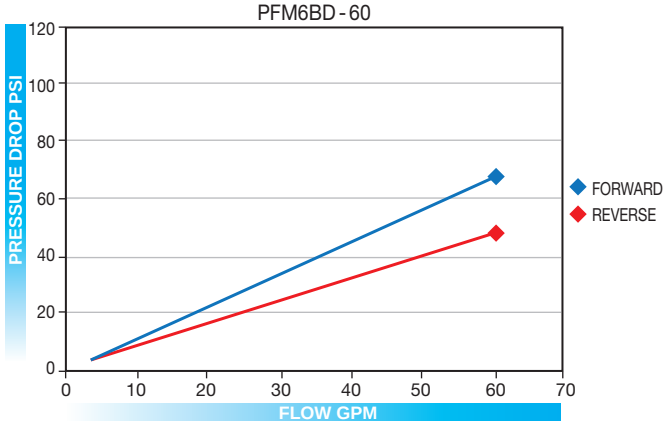

PFM6BD-85, F7160, F7162

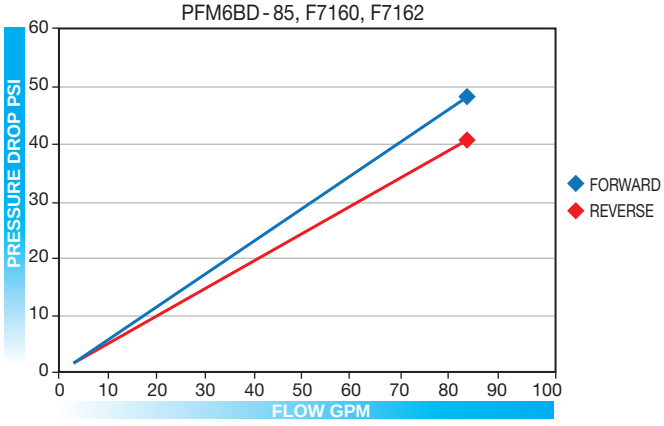

PFM6BD-200, F7161, F7163

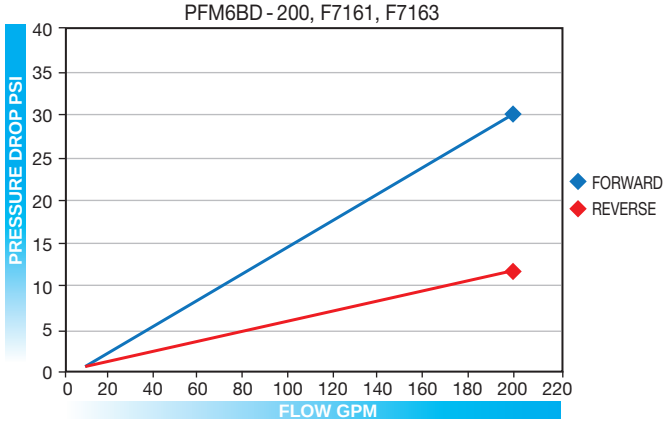

1 – Housing
2 – Turbine Rotor
3 – Rotor Supports
4 – Lock Nut
5 – Magnetic Pick-up (frequency output)
6 – Signal Converter (analog output)
7 – Pressure Port Adapter
8 – Temperature Port Adapter
9 – Retaining Rings

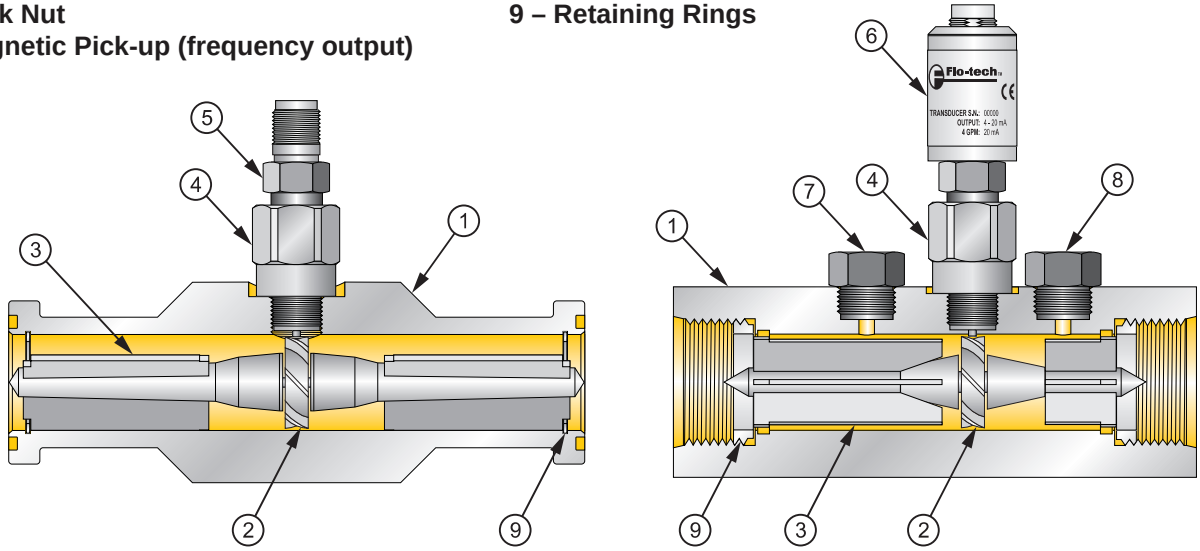

Operating Principle

Turbine flow sensors measure the flow rate of hydraulic fluid and compatible liquids. As fluid flows through the sensor it turns the turbine rotor, and as the turbine blades pass the magnetic pick-up a frequency signal is generated. This frequency signal is proportional to the flow rate and can be transmitted to Flo-tech's digital displays or converted to an analog output. Optional sensors allow measurement of pressure and temperature.

Rugged Construction: Flow sensors are constructed of anodized aluminum and Stressproof® steel with SAE; BSPP; Code 61; and Code 62, 4-bolt flanged ports. The flow sensors have a fluid temperature range of -4 to +300 °F, and are available in pressure ratings up to 6000 PSI.

Flow Straighteners: While flow straighteners are manufactured into each sensor, it is recommended that at least 10 port diameters of upstream pipe with no obstructions to the flow sensor and at least 5 port diameters downstream pipe be provided to obtain laminar flow.

Filtration: All applications should be filtered to at least 40 micron. Placing the flow sensor at a higher elevation in the system will avoid collection of debris, sediment, and dirt in the sensor.

Bi-directional flow capability: Turbine flow sensors are inherently bi-directional, as the turbine will function normally in reverse condition. Flo-tech does not guarantee accuracy in reverse flow. However, it is generally in the range of ±1.5% to ±2% full scale. If required, a reverse flow calibration is optional.

Accuracy: The flow sensors have a forward flow accuracy of ±1% full scale while monitoring hydraulic liquids with viscosity and specific gravity similar to factory calibrated fluids. Flow sensors that include the Intelligent Frequency Converter (IFC) are capable of even greater accuracy.

Repeatability: Flow sensor repeatability is within ±0.2%. This is particularly important in cyclical applications which require consistent readings.

Linearization: When used with the Intelligent Frequency Converter (IFC) and/or Flo-tech digital displays, accuracy can be improved by up to 4 times through the linearization of 10 points of flow data.

Calibration: Flow sensors are calibrated with 0.876 specific gravity, 150 SUS (32 cSt) hydraulic oil, irrespective of final fluid use. Three points of calibration data are provided with each turbine flow sensor. Optional 5- and 10-point calibration certification is also available.

Viscosity: The functional range of the turbine flow sensors is approximately 25 to 500 SUS (2 to 110 cSt).

Activa™ Sensor Array

Simultaneously Measures Flow, Pressure and Temperature



- Four flow ranges
- Turbine flow measurement
- IFC converter with 4-20 mA or 0-5 VDC output for flow rate
- 4-20 mA output for temperature and pressure
- Pressures up to 5800 PSI (400 Bar)
- Temperatures up to 300 °F (150 °C)
- Available with SAE or BSPP ports
- Flow accuracy ±1% of reading @ 32 cSt
- Repeatability ±0.2%

The Activa Sensor Array provides flow, temperature and pressure signals in a compact unit that requires only one hydraulic line break. Each sensor transmits an output signal that is easily integrated with PCs, PLCs, recorders or panel displays. Signals can also be transmitted to Flo-tech's F6700/F6750 Series digital displays.

Typical applications include fluid characteristic measurement on test stands, stationary hydraulic system monitoring, feedback for hydraulic system control, advance warning of impending component failure and mobile hydraulic system diagnosis.

SPECIFICATIONS

Performance

Forward Flow Accuracy:	±1% of reading @ 32 cSt
Repeatability:	±0.2%
Temperature[1]:	
Fluid	-4 to +300 °F (-20 to +150 °C)
Ambient	-4 to +131 °F (-20 to +55 °C)
Operating Pressure:	up to 5800 PSI (400 Bar) maximum
Pressure Drop:	See ΔP charts on page 24
Readout Accuracy:	±1 digit

IFC Signal Converter:	**F to I**	**F to V**
Power:	Loop powered, 6V insertion loss max 10 to 30 VDC supply range	10 to 26 VDC
Inputs:	Magnetic Pick-up	Magnetic Pick-up
Frequency	0 to 3500 Hz	0 to 3500 Hz
Trigger Sensitivity	30 mV p-p	30 mV p-p
Frequency Measurement Accuracy	±1%	±1%
Analog Output:	4-20 mA current loop	0-5 VDC
Resolution	1:4000	1:4000
Temperature Drift	50 ppm / °C max	50 ppm / °C max
Response	1.6 seconds min	1.6 seconds min
Environmental:		
Ambient Temperature	-22 to +158 °F (-30 to +70 °C)	-22 to +158 °F (-30 to +70 °C)
Humidity	0-90%, non-condensing	0-90%, non-condensing

Pressure Sensor: (optional)	See page 26 for complete specifications
Temperature Sensor: (optional)	See page 27 for complete specifications

Material

Housing:	6013-T651 Aluminum; anodized
Turbine Rotor:	T416 Stainless steel
Ball Bearings:	440C Stainless steel
Rotor Shaft:	T303 Stainless steel
Rotor Supports:	6061-T6 Aluminum alloy
F6202 & F6222	CA360 Brass
Hub Cones:	6061-T6 Aluminum alloy
F6204, F6206, F6208, F6224, F6226 & F6228 only	
Adapters:	6061-T6 Aluminum; anodized
Retaining Rings:	6061-T6 Aluminum alloy
Seals:	Buna N standard; Viton® and EPR optional
IFC (includes magnetic pick-up):	
Pick-up Body	T303 Stainless Steel
Pick-up Nut	T303 Stainless Steel
IFC Case	6061-T6 Aluminum; nickel-plated
IFC Connector	Brass; nickel-plated
Ports:	SAE J1926/1; ISO1179 (BSPP)

[1] When an optional pressure sensor is installed, the temperature range will be limited to the specifications for that device.

DIMENSIONS

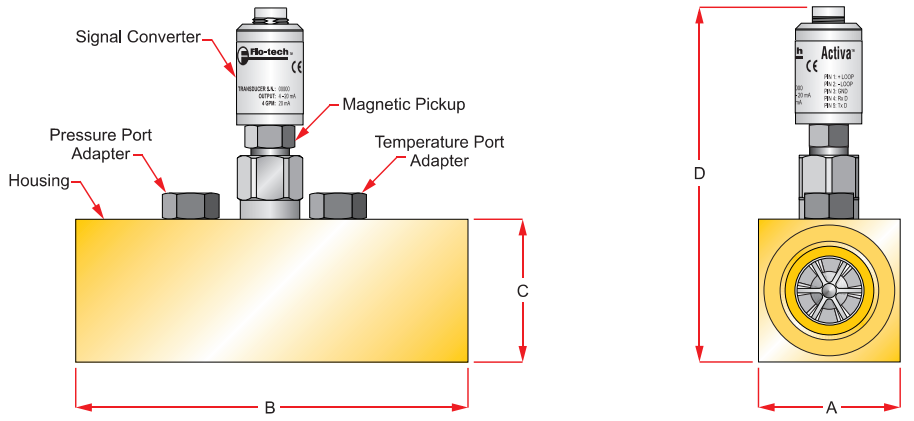

MODEL	A WIDTH IN (mm)	B LENGTH IN (mm)	C HEIGHT IN (mm)	D w/IFC IN (mm)	WEIGHT LBS (KG)
F6202-A / F6222-A	1.25 (32)	4.72 (120.0)	1.50 (38)	5.18 (131.5)	1.60 (0.73)
F6204-A / F6224-A	1.50 (38)	5.08 (129.0)	2.00 (51)	5.46 (138.7)	1.90 (0.86)
F6206-A / F6226-A	2.00 (51)	5.87 (149.0)	2.25 (58)	6.07 (154.2)	2.80 (1.27)
F6208-A / F6228-A	2.50 (64)	6.81 (173.0)	2.50 (64)	6.37 (161.8)	4.20 (1.91)

ORDERING INFORMATION

NOMINAL PORT SIZE	FLOW RANGE	MODEL NUMBER	FLOW TRANSDUCER	SEALS	TEMPERATURE	PRESSURE
SAE 8	0.4 - 7 GPM	F6202-A	I 4-20 mA Out (IFC) V 0-5 VDC Out (IFC)	B Buna N V Viton® E EPR	T with Sensor N 1/4 NPTF (F) Plugged S SAE 2 (J514) Plugged G G 1/4 (F) Plugged D SAE 4 Plugged	1 1000 PSI (69 Bar) Sensor 3 3000 PSI (207 Bar) Sensor 5 5000 PSI (345 Bar) Sensor 6 6000 PSI (414 Bar) Sensor[2] N 1/4 NPTF (F) Plugged S SAE 2 (J514) Plugged F G 1/4 (F) Plugged
SAE 12	1 - 40 GPM	F6204-A				
SAE 16	4 - 80 GPM	F6206-A				
SAE 20	8 - 160 GPM	F6208-A				
G 1/4	1.5 - 26 LPM	F6222-A				
G 3/4	3.8 - 151 LPM	F6224-A				
G 1	15 - 302 LPM	F6226-A				
G 1-1/4	30 - 605 LPM	F6228-A				

[2] Operating pressure rated to 5800 PSI (400 BAR) for Models F6208 and F6228.

Examples:

F6204-AIB-T6 = SAE 12 ports
2 - 40 GPM flow range
4-20 mA output
Buna N seals
Temperature sensor
6000 PSI (414 Bar) pressure sensor

F6228-AVV-G5 = G 1-1/4 ports
30 - 605 LPM flow range
0-5 VDC output
Viton® seals
G 1/4 (F) plugged temp port
5000 PSI (345 Bar) pressure sensor

ACCESSORIES

MODEL NUMBER	DESCRIPTION
F001109	5-Point Calibration Certificate[3]
F001110	10-Point Calibration Certificate[3]

[3] Certificates are traceable to NIST, ISO 9001.

For information about	Refer to
Digital Displays	Form No. 549
Pressure Sensors	Page 26
Temperature Sensor	Page 27
Cables	Pages 28 & 29

Ultima Sensor Array

Simultaneously Measures Flow, Pressure and Temperature



- Four flow ranges
- Turbine flow measurement
- Standard magnetic pick-up with frequency output for flow rate
- 4-20 mA output for temperature and pressure
- Pressures up to 5800 PSI (400 Bar)
- Temperatures up to 300 °F (150 °C)
- Available with SAE or BSPP ports
- Flow accuracy ±1% of full scale
- Repeatability ±0.2%

The Ultima Sensor Array provides flow, temperature and pressure signals in a compact unit that requires only one hydraulic line break. The magnetic pick-up generates a frequency output for flow rate measurement while the pressure and temperature sensors provide 4-20 mA output signals. The flow signals can be transmitted to Flo-tech's F6600/F6650 Series, and the temperature and pressure signals can be transmitted to the F6700/F6750 Series digital displays or any other instruments that accept a frequency or 4-20 mA signal.

Typical applications include fluid characteristic measurement on test stands, stationary hydraulic system monitoring, feedback for hydraulic system control, advance warning of impending component failure and mobile hydraulics system diagnosis.

SPECIFICATIONS

Performance

Forward Flow Accuracy:	±1% of full scale (±1% of rate when used with F6600/F6650 display)
Repeatability:	±0.2%
Turbine Response:	≤200ms
Temperature:	
Fluid	-4 to +300 °F (-20 to +150 °C)
Ambient	-4 to +131 °F (-20 to +55 °C)
Operating Pressure:	up to 5800 PSI (400 Bar) max
Pressure Drop:	See ΔP charts on page 24
Readout Accuracy:	±1 digit
Magnetic Pick-up:	
Electrical Output	
Signal	Self-generating alternating pulse 100 mV RMS (100 Hz) minimum
F6202 & F6222	10 mV RMS (200 Hz) minimum
Pressure Sensor: (optional)	See page 26 for complete specifications
Temperature Sensor: (optional)	See page 27 for complete specifications

Material

Housing:	6013-T651 Aluminum; anodized
Turbine Rotor:	T416 Stainless steel
Ball Bearings:	440C Stainless steel
Rotor Shaft:	T303 Stainless steel
Rotor Supports:	6061-T6 Aluminum alloy
F6202 & F6222	CA360 Brass
Hub Cones: F6204, F6206, F6208, F6224, F6226 & F6228 only	6061-T6 Aluminum alloy
Adapters:	6061-T6 Aluminum; anodized
Retaining Rings:	6061-T6 Aluminum alloy
Seals:	Buna N standard; Viton® and EPR optional
Magnetic Pick-up:	
Body	T303 Stainless Steel
Nut	T303 Stainless Steel
Ports:	SAE J1926/1; ISO1179 (BSPP)

DIMENSIONS

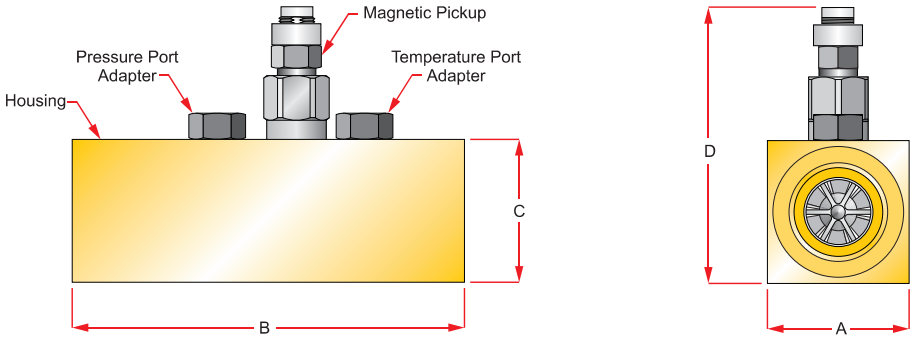

MODEL	A WIDTH IN (mm)	B LENGTH IN (mm)	C HEIGHT IN (mm)	D w/MAG IN (mm)	WEIGHT LBS (KG)
F6202-F / F6222-F	1.25 (32)	4.72 (120.0)	1.50 (38)	3.72 (94.5)	1.55 (0.70)
F6204-F / F6224-F	1.50 (38)	5.08 (129.0)	2.00 (51)	4.05 (102.9)	1.75 (0.79)
F6206-F / F6226-F	2.00 (51)	5.87 (149.0)	2.25 (58)	4.46 (113.3)	2.75 (1.25)
F6208-F / F6228-F	2.50 (64)	6.81 (173.0)	2.50 (64)	4.75 (120.7)	4.10 (1.86)

ORDERING INFORMATION

NOMINAL PORT SIZE	FLOW RANGE	MODEL NUMBER	SEALS	TEMPERATURE	PRESSURE
SAE 8	0.4 - 7 GPM	F6202-F[1]	**B** Buna N **V** Viton® **E** EPR	**T** with Sensor **N** 1/4 NPTF (F) Plugged **S** SAE 2 (J514) Plugged **G** G 1/4 (F) Plugged **D** SAE 4 Plugged	**1** 1000 PSI (69 Bar) Sensor **3** 3000 PSI (207 Bar) Sensor **5** 5000 PSI (345 Bar) Sensor **6** 6000 PSI (414 Bar) Sensor[2] **N** 1/4 NPTF (F) Plugged **S** SAE 2 (J514) Plugged **F** G 1/4 (F) Plugged
SAE 12	1 - 40 GPM	F6204-F			
SAE 16	4 - 80 GPM	F6206-F			
SAE 20	8 - 160 GPM	F6208-F			
G 1/4	1.5 - 26 LPM	F6222-F[1]			
G 3/4	3.8 - 151 LPM	F6224-F			
G 1	15 - 302 LPM	F6226-F			
G 1-1/4	30 - 605 LPM	F6228-F			

[2] Operating pressure rated to 5800 PSI (400 BAR) for Models F6208 and F6228.

[1] F6202-F and F6222-F require K-Factor Scaler, F5140 (see page 25), to amplify frequency signal to be compatible with Flo-tech's F6600/F6650 Digital Displays.

Examples:

F6204-FB-T6 = SAE 12 ports
2 - 40 GPM flow range
4-20 mA output
Buna N seals
Temperature sensor
6000 PSI (414 Bar) pressure sensor

F6228-FV-G5 = G 1-1/4 ports
30 - 605 LPM flow range
0-5 VDC output
Viton® seals
G 1/4 (F) plugged temp port
5000 PSI (345 Bar) pressure sensor

ACCESSORIES

MODEL NUMBER	DESCRIPTION
F001109	5-Point Calibration Certificate[3]
F001110	10-Point Calibration Certificate[3]

[3] Certificates are traceable to NIST, ISO 9001.

For information about	Refer to
Digital Displays	Form No. 549
Pressure Sensors	Page 26
Temperature Sensor	Page 27
Cables	Pages 28 & 29

Classic Turbine Flow Sensor

Measures Flow Rate Providing Frequency or Analog Output



- Choice of high strength aluminum or Stressproof ® steel bodies
- Turbine flow measurement
- Flow accuracy ±1% of full scale
- Repeatability ±0.2%
- Pressures up to 6000 PSI (414 Bar)
- Temperatures up to 300 °F (150 °C)
- Optional IFC converter provides analog output

Flo-tech's Classic Turbine Flow Sensors measure the flow rate of hydraulic fluids and other compatible liquids. Offered in a choice of high strength anodized aluminum or Stressproof® steel bodies, these durable flow sensors are capable of withstanding pressures up to 6000 PSI (414 Bar).

The Classic Series with the standard magnetic pick-up provides a frequency signal that is proportional to flow rate and can be transmitted to Flo-tech's F6600/F6650 Series digital displays. If an analog output is preferred, these sensors are also available with the IFC (Intelligent Frequency Converter) which offers either a 4-20 mA or 0-5 VDC output signal, allowing easy integration with Flo-tech's F6700/F6750 Series digital displays, PCs, PLCs or other data acquisition devices.

SPECIFICATIONS

Performance

Forward Flow Accuracy:	
Magnetic pick-up	±1% of full scale (±1% of rate when used with F6600/F6650 display)
IFC option	±1% of reading @ 32 cSt
Repeatability:	±0.2%
Turbine Response:	≤200ms
Temperature:	
Fluid	-4 to +300 °F (-20 to +150 °C)
Ambient	-4 to +131 °F (-20 to +55 °C)
Operating Pressure:	
FSC, FSB Series	5000 PSI (345 Bar) maximum
FSD Series	6000 PSI (414 Bar) maximum
Pressure Drop:	See ΔP charts on page 24

Magnetic Pick-up, Standard:	
Electrical Output Signal	Self-generating alternating pulse 100 mV RMS (100 Hz) minimum
FSC-375 Series	10 mV RMS (200 Hz) minimum

IFC Signal Converter, Optional:	**F to I**	**F to V**
Power:	Loop powered, 6V insertion loss max 10 to 30 VDC supply range	10 to 26 VDC
Inputs:	Magnetic Pick-up	Magnetic Pick-up
Frequency	0 to 3500 Hz	0 to 3500 Hz
Trigger Sensitivity	30 mV p-p	30 mV p-p
Frequency Measurement Accuracy	±1%	±1%
Analog Output:	4-20 mA current loop	0-5 VDC
Resolution	1:4000	1:4000
Temperature Drift	50 ppm / °C max	50 ppm / °C max
Response	1.6 seconds min	1.6 seconds min
Environmental:		
Ambient Temperature	-22 to +158 °F (-30 to +70 °C)	-22 to +158 °F (-30 to +70 °C)
Humidity	0-90%, non-condensing	0-90%, non-condensing

Material

Housing:	6013-T651 Aluminum; anodized
FSD Series	Stressproof® steel; zinc plate, dichromate finish
Turbine Rotor:	T416 Stainless steel
Bearings:	440C Stainless steel ball bearings
FSD Series	Tungsten carbide journal bearings
Rotor Shaft:	T303 Stainless steel
Rotor Supports:	6061-T6 Aluminum alloy
FSC-375, 500, 750	CA360 Brass
FSD Series	T303 Stainless steel
Hub Cones:	6061-T6 Aluminum alloy
FSC-500, 750, 1000, 1005 & FSB-1250, 1500 only	
Retaining Rings:	Steel; zinc plate
FSC-375 Series	T303 Stainless steel
Seals:	Buna N standard; Viton® and EPR optional
Magnetic Pick-up, Standard:	
Body	T303 Stainless Steel
Nut	T303 Stainless Steel
IFC (includes magnetic pick-up), Optional:	
Case	6061-T6 Aluminum; nickel plate
Connector	Brass; nickel plate

Ports	SAE J1926/1, Code 61 and Code 62: SAE J518

Classic Turbine Flow Sensor

Measures Flow Rate Providing Frequency or Analog Output

DIMENSIONS

FSC

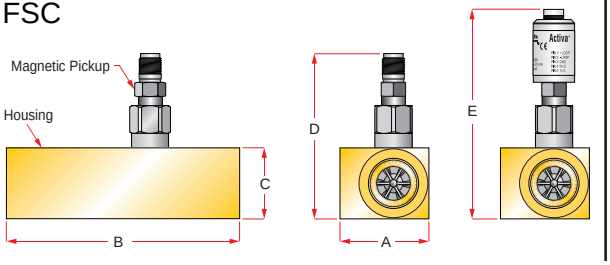

FSB

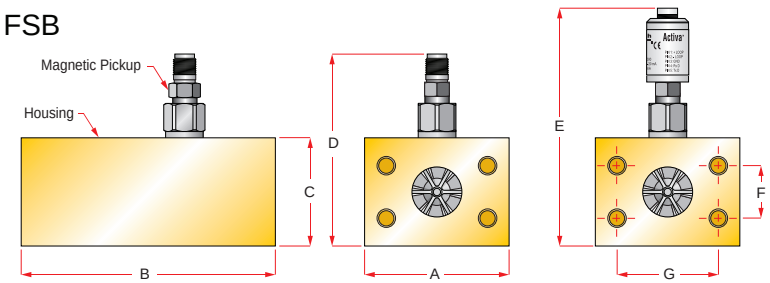

SERIES	A WIDTH IN (mm)	B LENGTH IN (mm)	C HEIGHT IN (mm)	D w/MAG IN (mm)	E w/IFC IN (mm)	F IN (mm)	G IN (mm)	WEIGHT[1] LBS (KG)
FSC-375	1.25 (32)	5.00 (127)	1.50 (38)	3.91 (99)	5.48 (139)	–	–	1.25 (0.57)
FSC-500	2.00 (51)	6.50 (165)	2.00 (51)	4.16 (106)	5.84 (148)	–	–	2.75 (1.25)
FSC-750	2.00 (51)	6.50 (165)	2.00 (51)	4.25 (108)	5.93 (151)	–	–	2.87 (1.30)
FSC-1000	2.50 (64)	6.50 (165)	2.00 (51)	4.34 (110)	5.97(152)	–	–	3.25 (1.47)
FSC-1005	2.50 (64)	6.50 (165)	2.00 (51)	4.34 (110)	5.97(152)	–	–	3.25 (1.47)
FSB-1250	4.00 (102)	7.00 (178)	3.00 (76)	4.94 (126)	6.43 (165)	1.188 (30.1)	2.312 (58.7)	7.75 (3.52)
FSB-1500	4.00 (102)	7.00 (178)	3.00 (76)	5.10 (130)	6.59 (167)	1.406 (35.7)	2.75 (69.9)	7.40 (3.36)
FSD-1250	2.12 (54)	7.50 (190)	2.125 (54)	4.50 (114)	5.17 (131)	–	–	6.12 (2.78)
FSD-1500	2.50 (64)	7.50 (190)	2.500 (64)	4.85 (123)	5.34 (135)	–	–	6.75 (3.06)
FSD-2000	3.12 (79)	8.25 (209)	3.125 (79)	5.39 (137)	5.45 (138)	–	–	8.55 (3.88)

[1] Weight is for sensors with standard magnetic pick-up installed. For sensors with IFC add .10 lbs.

FSD

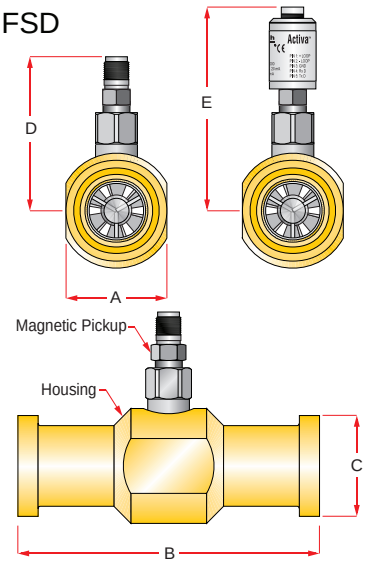

ORDERING INFORMATION

NOMINAL PORT SIZE	FLOW RANGE GPM (LPM)	SERIES	MODEL NUMBER Frequency Output	MODEL NUMBER 4-20 mA Output	MODEL NUMBER 0-5 VDC Output
SAE 8	0.4 - 7 (1.5 - 26)	FSC-375	F2945-ASCM[2]	F2945-ASCI	F2945-ASCV
SAE 12	1 - 15 (4 - 56)	FSC-500	F2082-ASCM	F2082-ASCI	F2082-ASCV
SAE 12	2 - 25 (7.5 - 94)	FSC-750	F2083-ASCM	F2083-ASCI	F2083-ASCV
SAE 16	3 - 60 (11.5 - 227)	FSC-1000	F2084-ASCM	F2084-ASCI	F2084-ASCV
SAE16	4 - 85 (15 - 321)	FSC-1005	F2084-ASCM8	F2084-ASCI8	F2084-ASCV8
SAE 20, Code 61, 4-Bolt Face	5 - 100 (20 - 378)	FSB-1250	F2085-ASBM	F2085-ASBI	F2085-ASBV
SAE 24, Code 61, 4-Bolt Face	7 - 200 (27 - 757)	FSB-1500	F2086-ASBM	F2086-ASBI	F2086-ASBV
SAE 20, Code 62, Flange Head	5 - 100 (20 - 378)	FSD-1250	F2085-SCDM	F2085-SCDI	F2085-SCDV
SAE 24, Code 62, Flange Head	7 - 200 (27 - 757)	FSD-1500	F2086-SCDM	F2086-SCDI	F2086-SCDV
SAE 32, Code 62, Flange Head	10 - 350 (37 - 1324)	FSD-2000	F2998-SCDM	F2998-SCDI	F2998-SCDV

[2] FSC-375 (F2945-ASCM) requires K-Factor Scaler, F5140 (see page 25), to amplify frequency signal to be compatible with Flo-tech's F6600/F6650 Digital Displays.

Examples:

F2084-ASCM = SAE 16 ports
3 - 60 GPM (11.5 - 227 LPM)
Frequency output
Buna N seals

F2086-ASBI = SAE 24, Code 61, 4-Bolt Face ports
7 - 200 GPM (27 - 757 LPM)
4-20 mA output
Buna N seals

ACCESSORIES

MODEL NUMBER	DESCRIPTION
F001109	5-Point Calibration Certificate[3]
F001110	10-Point Calibration Certificate[3]

[3] Certificates are traceable to NIST, ISO 9001.

For information about	Refer to
Digital Displays	Form No. 549
Pressure Sensors	Page 26
Temperature Sensor	Page 27
Cables	Pages 28 & 29

Quad Series Turbine Flow Sensor

Provides Bi-directional Flow Rate Measurement



- Four flow ranges
- Bi-directional turbine flow measurement
- High strength aluminum bodies
- Flow accuracy ±1% of full scale for both forward and reverse flow
- Repeatability ±0.2%
- Pressures up to 5000 PSI (345 Bar)
- Temperatures up to 300 °F (150 °C)

Derived from the FSC Series, the F2000 Quad Series of flow sensors utilizes two flow transducers which are 90-degrees electrically out of phase from each other. With the addition of a second flow transducer, it is possible to monitor flow in both directions. The F2000 Quad is suitable for up-down counters that can discern the leading and trailing edges of the quadrature signals.

Current applications include using the F2000 as a speed-sensing device on mobile equipment. This bi-directional flow sensor can be used as a governor, sending frequency signals back to a PLC which enable it to make the necessary adjustments. Other functions of the flow sensor are in linear applications where accurate positioning is required.

SPECIFICATIONS

Performance

Forward and Reverse Flow

Accuracy:	±1% of full scale
Repeatability:	±0.2%
Turbine Response:	≤200ms
Temperature:	
Fluid	-4 to +300 °F (-20 to +150 °C)
Ambient	-4 to +131 °F (-20 to +55 °C)
Operating Pressure:	5000 PSI (345 Bar) maximum
Pressure Drop:	See ΔP charts on page 24
Magnetic Pick-up:	
Electrical Output Signal	Self-generating alternating pulse 100 mV RMS (100 Hz) minimum

Material

Housing:	6013-T651 Aluminum; anodized
Turbine Rotor:	T416 Stainless steel
Ball Bearings:	440C Stainless steel
Rotor Shaft:	T303 Stainless steel
Rotor Supports:	6061-T6 Aluminum alloy
FSC-2005, 2075	CA360 Brass
Hub Cones:	6061-T6 Aluminum alloy
Retaining Rings:	Steel; zinc plate
Seals:	Buna N standard; Viton® and EPR optional
Magnetic Pick-ups:	
Body	T303 Stainless Steel
Nut	T303 Stainless Steel

Ports:	SAE J1926/1

DIMENSIONS

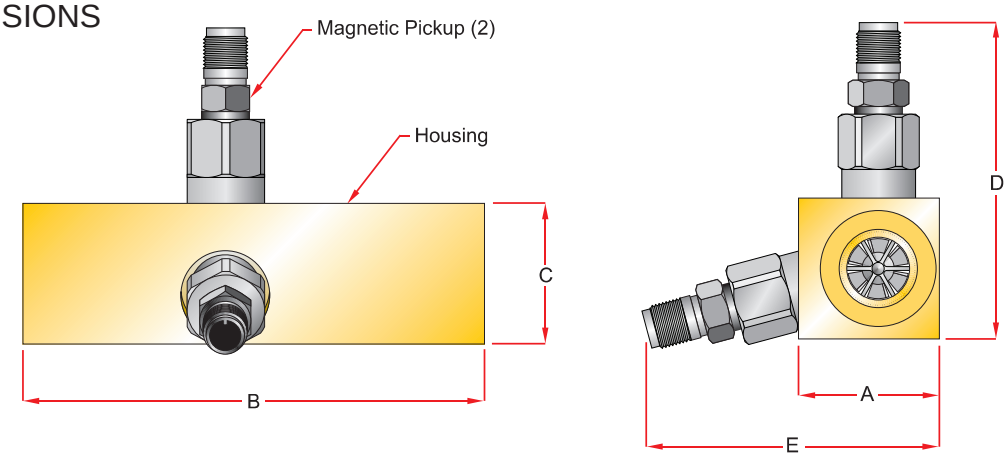

SERIES	A WIDTH IN (mm)	B LENGTH IN (mm)	C HEIGHT IN (mm)	D w/MAG IN (mm)	E w/MAG IN (mm)	WEIGHT LBS (KG)
FSC-2005	2.00 (51)	6.50 (165)	2.00 (51)	4.16 (106)	4.05 (102)	2.75 (1.25)
FSC-2075	2.00 (51)	6.50 (165)	2.00 (51)	4.25 (108)	4.05 (102)	2.87 (1.30)
FSC-2100	2.50 (64)	6.50 (165)	2.00 (51)	4.34 (110)	4.59 (117)	3.25 (1.47)
FSC-2150	2.50 (64)	6.50 (165)	2.00 (51)	4.34 (110)	4.59 (117)	7.75 (3.52)

ORDERING INFORMATION

NOMINAL PORT SIZE	FLOW RANGE GPM (LPM)	SERIES	MODEL
SAE 12	1 - 15 (4 - 56)	FSC-2005	F2082-ASCQ4
SAE 12	2 - 25 (7.5 - 94)	FSC-2075	F2083-ASCQ4
SAE 16	3 - 60 (11.5 - 227)	FSC-2100	F2084-ASCQ4
SAE 16	4 - 85 (15 - 321)	FSC-2150	F2085-ASCQ4

Examples:

F2084-ASCQ4 = SAE 16 ports
3 - 60 GPM (11.5 - 227 LPM)
Bi-directional frequency output
Buna N seals

ACCESSORIES

MODEL NUMBER	DESCRIPTION
F001109	5-Point Calibration Certificate[1]
F001110	10-Point Calibration Certificate[1]

For information about	Refer to
Digital Displays	Form No. 549
Cables	Pages 28 & 29

[1] Certificates are traceable to NIST, ISO 9001.

Flow vs Pressure Drop Charts

Turbine Flow Sensors

Activa™ and Ultima Sensor Arrays

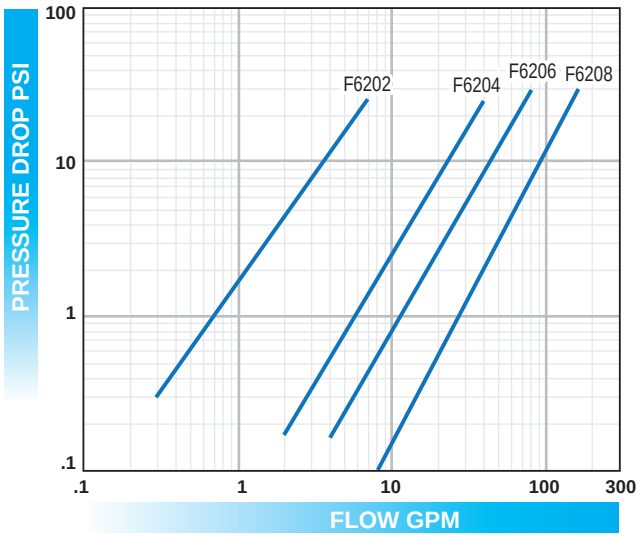

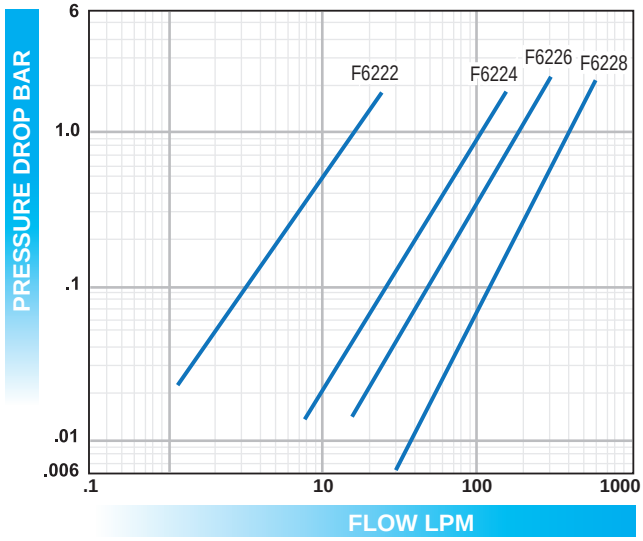

Classic Flow Sensors

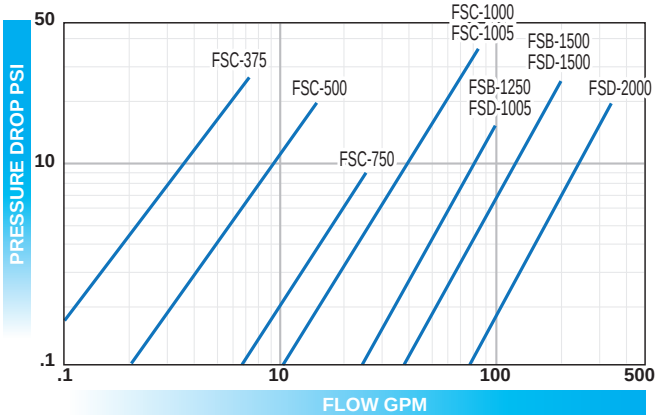

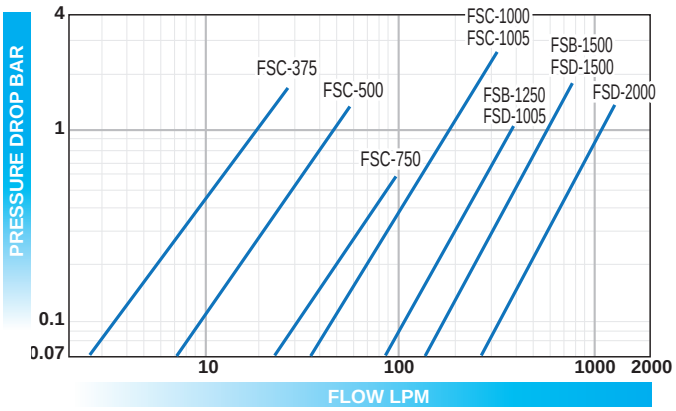

Quad Flow Sensors

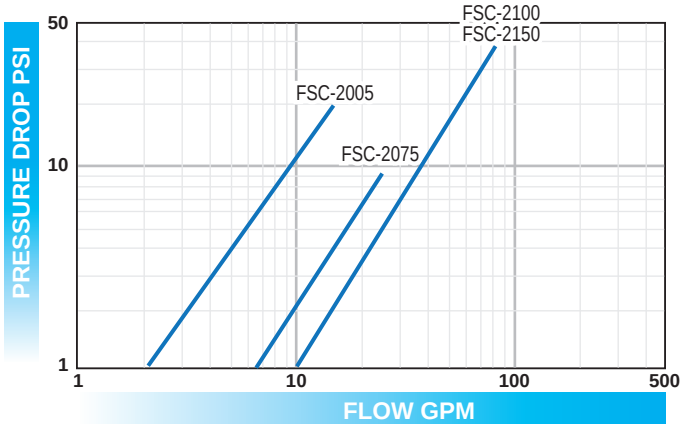

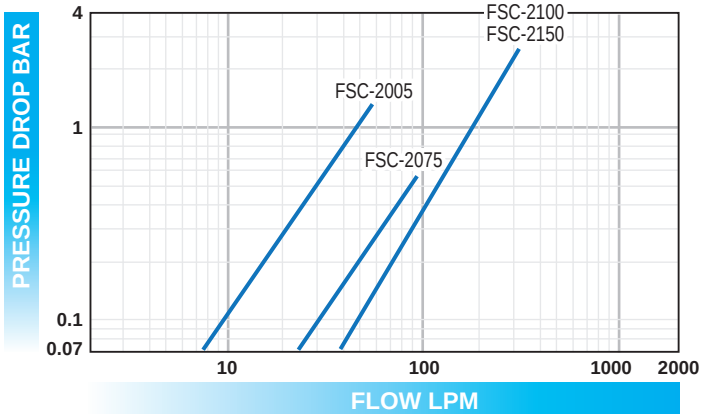

SPECIFICATIONS

External Power:

Input Voltage	8.5 to 30 VDC, diode protected
Maximum Current Draw	18 mA, using internal resistor @ 30 VDC input
Inputs:	Magnetic pick-up
Frequency Range	0-4000 Hz
Trigger Sensitivity	30 mV p-p to 30 V p-p
Output Signal:	30 VDC max voltage (open collector transistor) 0.25 W max power

Pulse type, using internal pull-up resistor;
V_H = power input voltage - 0.7 VDC
V_L = less than 0.4 V @ max input power
Pulse type, using external pull-up resistor;
V_H = input voltage to external pull-up resistor
$V_L = [V_H/(\text{selected resistor value} + 47\Omega)] \times 47\Omega$
Pulse length;
150µs, 1ms, 25ms, 100ms, 500ms, 1s or auto mode selectable

Internal Pull-up Resistor:	Jumper disable option 3.6K Ohm
Operating Temperature:	-22 to +158 °F (-30 to +70 °C)
Enclosure:	UL 94-5VA flame retardant ABS with mounting flanges

DIMENSIONS - Inches (mm)

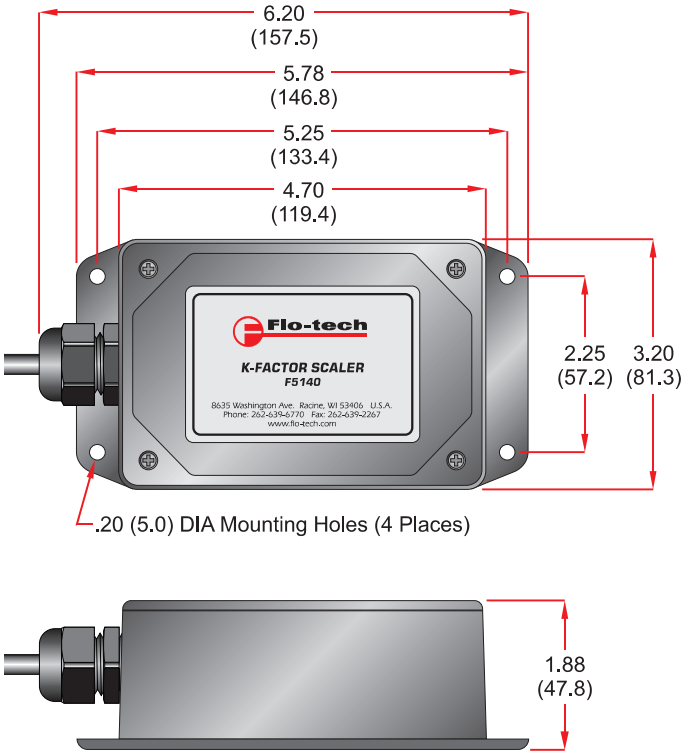



- Pre-amplifier for low level turbine meter
- Interface for pulse output devices to PLC, RTU, PC data acquisition card or similar devices
- Scale turbine meter output to desired engineering units
- On board microcontroller
- Internal or external pull-up resistor
- Compact ABS enclosure with mounting flanges
- Field adjustable (with optional software)
- K-factor range 1- 999,999,999

The K-Factor Scaler is a field adjustable frequency divider that converts the low level frequency output from a turbine meter into a scaled square wave output signal. This amplified, square wave output signal will interface with any frequency or counter input data collection device.

Due to the low level frequency signal of the FSC-375 and the Ultima F6202-F and F6222-F series turbine meters, the K-Factor Scaler is required to amplify the signal of these turbine meters for transmission to the Flo-tech F6600 and F6650 Series digital displays.

The K-Factor Scaler is also capable of converting the frequency output of a turbine meter into a different frequency, representing another unit of measure, such as liters, barrels, cubic feet, etc. This requires the optional programming software kit and the K-factor information unique to the turbine meter.

ORDERING INFORMATION

MODEL	PART NUMBER
K-Factor Scaler	**F5140**
Programming Software Kit	**F5141**

Pressure Sensor F6301 Series

With 4-20 mA Output

- 4-20 mA electrical output
- Long-term stability & repeatability
- Wide range of pressure ratings
- Stainless steel NEMA 4X enclosure

The F6301 Pressure Sensors utilize polysilicone strain resistors to create very low noise levels with very high signal output. The metal diaphragm and polysilicone bridge are unaffected by shock, vibration or mounting position.



SPECIFICATIONS

Overpressure:			
Full scale in PSI	0-15 to 0-2000	0-3000 to 0-5000	0-6000 to 0-15,000
Proof	200%	150%	120%
Burst	800%	300%	150%
Accuracy:	±1% of full scale		
Non-linearity	±0.7%		
Hysteresis	±0.2%		
Non-repeatability	±0.07%		
Durability:	108 cycles 20/80% full scale with negligible performance change		
Response Time:	<5ms		
Environmental Effects:			
Humidity	No performance effect at 95% relative humidity, non-condensing		
Position Effect	<0.01% full scale		
Temperature:			
Storage	-65 to +250 °F (-54 to +121 °C)		
Operating	-20 to +180 °F (-29 to +82 °C)		
Compensating	-20 to +160 °F (-29 to +71 °C)		
Thermal Coefficients (68 °F ref.) % full scale / °F Standard:			
Zero	±0.04%		
Span	±0.04%		
Vibration Sweep:	<±0.1% full scale effect for 0-2000 Hz at 20 g's in any axis		
Shock:	<±0.5% full scale effect for 100 g's, 20 ms shock in any axis		

Power Requirements:	10-36 VDC unregulated 4-20 mA reverse polarity protected
Circuit to Case Insulation Resistance:	100 M Ohms @ 50 VDC
Electrical Output:	
Signal	4-20 mA (2 wire)

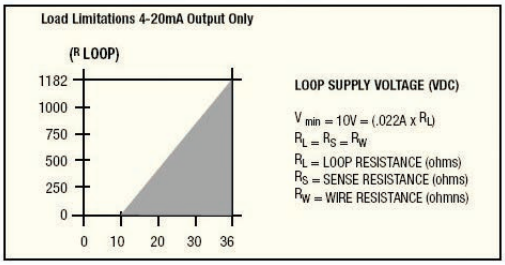

Physical:	
Enclosure	NEMA 4X
Weight	2 oz (approximate without cable)
Materials:	
Case	300 Series stainless steel
Cable	#24 AWG, 36" PVC, shielded, vented, UL approved
Diaphragm	17-4 PH stainless steel
Connection	1/4 NPT male

DIMENSIONS - Inches (mm)

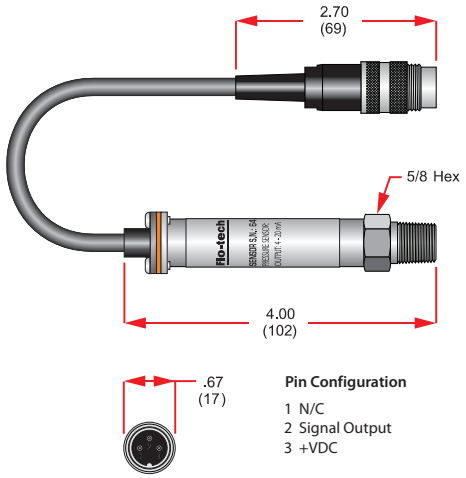

ORDERING INFORMATION

PART NUMBER	PSI	Bar	kg/cm²
F6301-15	0 - 15	0 - 1.034	0 - 1.055
F6301-30	0 - 30	0 - 1.999	0 - 1.999
F6301-60	0 - 60	0 - 4.13	0 - 4.22
F6301-100	0 - 100	0 - 6.89	0 - 7.03
F6301-150	0 - 150	0 - 10.34	0 - 10.55
F6301-200	0 - 200	0 - 13.78	0 - 14.06
F6301-300	0 - 300	0 - 19.99	0 - 19.99
F6301-500	0 - 500	0 - 34.5	0 - 35.1
F6301-750	0 - 750	0 - 51.7	0 - 52.7
F6301-1K	0 - 1000	0 - 68.9	0 - 70.3
F6301-2K	0 - 2000	0 - 137.8	0 - 140.6
F6301-3K	0 - 3000	0 - 199.9	0 - 199.9
F6301-5K	0 - 5000	0 - 345	0 - 351
F6301-6K	0 - 6000	0 - 414	0 - 422
F6301-7.5K	0 - 7500	0 - 517	0 - 527
F6301-10K	0 - 10,000	0 - 689	0 - 703
F6301-15K	0 - 15,000	0 - 1034	0 - 1055

Temperature Sensor F6310 Series

With 4-20 mA Output



- RTD temperature element
- 4-20 mA electrical output
- Temperatures up to +350 °F (+176 °C)
- Withstands pressures up to 6000 PSI (414 Bar)

These two-wire platinum RTD (resistance temperature detector) sensors with 4-20 mA output are designed for direct insertion into high pressure fluid systems without need for special pressure fittings. They are ideal for indicating system operating conditions, temperature testing and process measurements and control.

DIMENSIONS - Inches (mm)

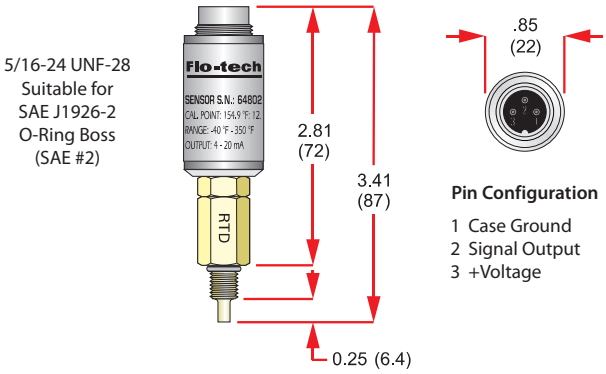

SPECIFICATIONS

Temperature Range:	
Ambient	-40 to +185 °F (-40 to +85 °C)
Fluid	-40 to +350 °F (-40 to +177 °C)
Accuracy:	See Sensor Accuracy vs Temperature Chart below
Current Span Range:	4-20 mA
Response Time:	3 seconds
Maximum Pressure:	6000 PSI (414 Bar)
Operating Loop Voltage:	
Minimum	9V + Voltage of load resistor at 20 mA
Maximum	28V
Min Load Resistance	10 Ohms
Max Load Resistance (including wiring losses)	Loop Voltage - 9V / 20 mA = Ohms

ORDERING INFORMATION

PART NUMBER	Fluid Temperature Range
F6310	-40 to +350 °F (-40 to +177 °C)

Sensor Accuracy vs Temperature

Combined Celsius / Fahrenheit			Celsius Only		Fahrenheit Only	
Temperature		Accuracy	Temp.	Accuracy	Temp.	Accuracy
°C	°F	°C	°C	°C	°F	°F
-20	-4	±0.8	-20	±0.8	-4	±1.4
0	+32	±0.6	0	±0.6	0	±1.2
+100	+212	±1.2	+50	±0.9	+50	±1.2
+176	+350	±1.7	+100	±1.2	+100	±1.5
-	-	-	+150	±1.5	+200	±2.1
-	-	-	+176	±1.7	+300	±2.7
-	-	-	-	-	+350	±3.0

Cables

Flo-tech offers a complete selection of mating cables to complete your hydraulic measurement system.

To select the appropriate cable for your application, refer to the Connecting Cable Charts shown below and on the next page.



Sensor Model		Connecting Cable	Connecting Ends	Signal Amplifier	Digital Display
FREQUENCY	FSC-375	**F2832-6, 6 ft or F2832-15, 15 ft**	MS female to tinned leads	F5140 K-Factor Scaler	F6600 / F6650 Series
	FSC-500	**F2832-6, 6 ft or F2832-15, 15 ft**	2-Pin (MS) female to tinned leads	—	F6600 / F6650 Series or HB2800 Series
	FSC-750				
	FSC-1000				
	FSC-1005				
	FSB-1250				
	FSB-1500				
	FSD-1250				
	FSD-1500				
	FSD-2000				
	F6202-F / F6222-F	**F6234-6, 6 ft or F6234-15, 15 ft**	3-Pin female to tinned leads	F5140 K-Factor Scaler	F6600 / F6650 Series or HB2800 Series
	F6204-F / F6224-F	**F6234-6, 6 ft or F6234-15, 15 ft**	3-Pin female to tinned leads	—	F6600 / F6650 Series
	F6206-F / F6226-F				
	F6208-F / F6228-F				
ANALOG	FSC-375 with IFC	**F6557-6, 6 ft or F6557-15, 15 ft**	5-Pin female to tinned leads	—	F6700 / F6750 Series
	FSC-500 with IFC				
	FSC-750 with IFC				
	FSC-1000 with IFC				
	FSC-1005 with IFC				
	FSB-1250 with IFC				
	FSB-1500 with IFC				
	FSD-1250 with IFC				
	FSD-1500 with IFC				
	FSD-2000 with IFC				
	F6202-AI / F6222-AI F6202-AV / F6222-AV	**F6557-6, 6 ft or F6557-15, 15 ft**	5-Pin female to tinned leads	—	F6700 / F6750 Series
	F6204-AI / F6224-AI F6204-AV / F6224-AV				
	F6206-AI / F6226-AI F6206-AV / F6226-AV				
	F6208-AI / F6228-AI F6208-AV / F6228-AV				
	F6301-X (Pressure Sensors)	**F6234-6, 6 ft or F6234-15, 15 ft**	3-Pin female to tinned leads	—	F6700 / F6750 Series
	F6310 (Temperature Sensor)	**F6234-6, 6 ft or F6234-15, 15 ft**	3-Pin female to tinned leads	—	F6700 / F6750 Series

2-Pin (MS) and 3 Pin Connectors for Frequency Flow Signals

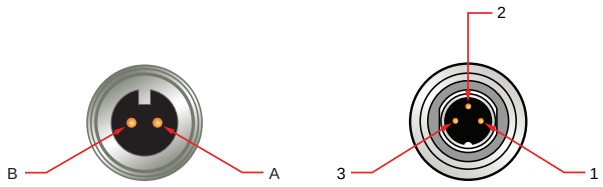

PIN A + (Positive)
PIN B - (Negative)

PIN 1 N/C
PIN 2 - (Negative)
PIN 3 + (Positive)

3-Pin Connectors for Analog Pressure and Temperature Signals

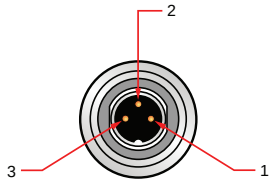

Pressure Signals
PIN 1 N/C
PIN 2 - Signal Output
PIN 3 + Voltage

Temperature Signals
PIN 1 Case Ground
PIN 2 - Signal Output
PIN 3 + Voltage

5-Pin Connector for Analog Flow Signals

F to I CONVERTER

+ 4 - 20 mA	PIN 1	RED	+ 4 - 20 mA (Sink)
- 4 - 20 mA	PIN 2	BLACK	- 4 - 20 mA (Source)
N/C	PIN 3	WHITE	No Connection
N/C	PIN 4		
N/C	PIN 5		

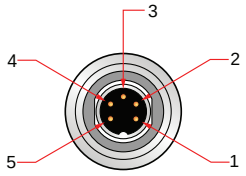

CONVERTER MALE CONNECTOR

F to V CONVERTER

10 - 30 VDC	PIN 1	RED	+ 10 to 26 VDC
SIGNAL	PIN 2	BLACK	SIGNAL
GND	PIN 3	WHITE	0 V
N/C	PIN 4		
N/C	PIN 5		

Sensor Model		Connecting Cable	Connecting Ends	Signal Amplifier	Digital Display
FREQUENCY	F6150-F	**F2832-6, 6 ft or F2832-15, 15 ft**	2-Pin (MS) female to tinned leads	—	F6600 / F6650 Series or HB2800 Series
	F6153-F				
	F6156-F				
	F6159-F				
	F6161-F				
	F6163-F				
	F6165-F				
	F6167-F				
ANALOG	F6150-I and F6150-V	**F6557-6, 6 ft or F6557-15, 15 ft**	5-Pin female to tinned leads	—	F6700 / F6750 Series
	F6153-I and F6153-V				
	F6156-I and F6156-V				
	F6159-I and F6159-V				
	F6161-I and F6161-V				
	F6163-I and F6163-V				
	F6165-I and F6165-V				
	F6167-I and F6167-V				
	F6301-X (Pressure Sensors)	**F6234-6, 6 ft or F6234-15, 15 ft**	3-Pin female to tinned leads	—	F6700 / F6750 Series
	F6310 (Temperature Sensor)	**F6234-6, 6 ft or F6234-15, 15 ft**	3-Pin female to tinned leads	—	F6700 / F6750 Series

MC4000 Diagnostic Test Equipment

Simultaneously Measures Flow, Pressure, Temperature, and Speed

- Hand-held hydraulic analyzer offers instant and recordable diagnostics
- Hydraulic horsepower calculation
- Measures fast transients
- Flow sensor linearization
- 2.5 MB data logging capacity
- Five sensor inputs, including:
  - Turbine Flow Sensor
  - Two Pressure Sensors
  - Temperature Sensor
  - RPM Speed indicator



ORDERING INFORMATION

FMC4 – a b – c d e

a	b	c	d	e
Language	Power Cord 100…240V AC	Turbine Flow Sensor	Pressure Sensor	Temperature Sensor

a – Language
1) English + Spanish
2) English + French

b – Power Cord 100…240V AC
2) International Power Cord
3) North American Plug (NEMA 5/15P)

c – Turbine Flow Sensor

	Flow Range	
N) None		
1) SAE 8 ports:	0.4…7 gpm	(1.5…26 lpm)
2) SAE 12 ports:	1…40 gpm	(4…151 lpm)
3) SAE 16 ports:	4…80 gpm	(15…302 lpm)
4) SAE 20 ports:	8…160 gpm	(30…605 lpm)
5) G¼ ports:	0.4…7 gpm	(1.5…26 lpm)
6) G¾ ports:	1…40 gpm	(4…151 lpm)
7) G1 ports:	4…80 gpm	(15…302 lpm)
8) G1¼ ports:	8…160 gpm	(30…605 lpm)

d – Pressure Sensor
N) None
1) 870 psi (60 bar)
2) 1450 psi (100 bar)
3) 3625 psi (250 bar)
4) 5800 psi (400 bar)

e – Temperature Sensor
N) None
1) 392° F (200° C)

DIMENSIONS - Inches (mm)

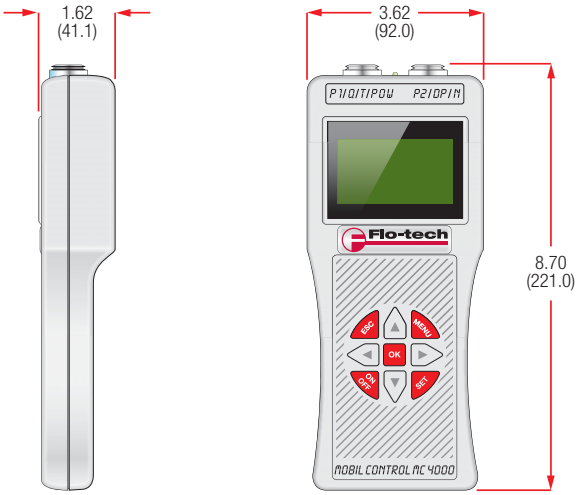

ACCESSORIES

A comprehensive set of accessories is available for the MC4000. Use these accessories to expand the capabilities of the MC4000. For a complete list of available accessories see document TUR-PL-00031-EN.

Hydraulic Formulas and Viscosity Information

Flow Rate Formulas

$$\text{Frequency (Hz)} = \frac{K \times GPM}{60} \qquad GPM = \frac{Hz \times 60}{K}$$

$$\text{K factor (K)} = \frac{Hz \times 60}{GPM} \qquad \text{Time Base (TB)} = \frac{GPM}{Hz}$$

Flow Rate Related Formulas

$$\text{Valve } C_V \text{ Factor} = \frac{\text{Flow Rate (GPM)} \times \sqrt{\text{Fluid Specific Gravity}}}{\sqrt{\Delta P \text{ across valve (PSI)}}}$$

$$\text{Cylinder Velocity} = \frac{0.3208 \times \text{Flow Rate (GPM)}}{\text{Net Cylinder Area (in}^2\text{)}}$$

$$\text{Fluid Motor Torque} = \frac{\text{Flow Rate (GPM)} \times \text{Pressure (PSIG)} \times 36.77}{\text{Rotational Speed}}$$

Power Calculations

$$\text{H.P.} = \frac{GPM \times PSI}{1714} \qquad \text{H.P.} = \frac{LPM \times Bar}{447.4} \qquad kW = \frac{LPM \times Bar}{600}$$

Fluid Viscosity Conversion Table

±1% Viscosity Range for Flo-tech Testers and Sensors is 25 to 500 SUS

Fluid viscosity used to calibrate Testers and Sensors.

Saybolt Universal Seconds (SUS)	ISO-VG	CentiStoke	CentiPoise£	Typical Brands/Liquids at 100 °F
31	2	1.0	0.876	Water
35	3	2.5	2.19	-
40	5	4.2	3.68	-
45	5/7	5.9	5.17	-
50	7	7.5	6.57	Kerosene
55	7/10	8.8	7.71	Atlantic Richfield/Duro 55 Hydraulic Oil
60	10	10.5	9.20	Monsanto/Skydrol - 500 A
70	10/15	13.2	11.56	Mobil/Aero HFA Hydraulic Oil
80	15	15.7	13.75	No. 4 Fuel Oil
90	22	18.2	15.94	Stauffer Chemical/Fyrquel 90
100	22	20.6	18.05	Conoco/Syncon Synthetic AW Hydraulic Oil
150	32	32.0	28.03	Mobil/DTE 24 Hydraulic Oil
200	46	43.2	37.84	Citco/Glycol FR-40XD (Oil in Water)
300	68	65.0	56.94	SAE 20 Crankcase Oil
400	68/100	86.0	75.34	Sunoco/Sunvis 41 Hydraulic Oil
500	100	108	94.61	SAE 30 Crankcase Oil
750	150	162	141.91	SAE 40 Crankcase Oil
1000	220	216	189.22	Mobil/Paper Machine Oil - Type K
1500	320	323	282.95	SAE 50 Crankcase Oil
2000	460	431	377.56	Amoco/American Industrial Oil - No. 460
3000	680	648	567.65	SAE 140 Gear Oil
4000	1000	862	755.11	SAE 250 Gear Oil

£ CentiPoise are given for oil of 0.876 specific granvity. Relationship: CentiStokes × Specific Gravity = CentiPoise



For Product Details and Requirements Contact:

Concord Hydraulics Pvt Ltd

Mumbai, MH, IN

Telephone: +91-775-795-6524
+91-869-281-0551

E-mail: sales@chpls.com
sales01@chpls.com

Website: www.concordhydraulics.com

No matter what your industrial application, Badger Meter has a flow measurement solution for your exacting requirements.

Trademarks appearing in this document are the property of their respective entities. Due to continuous research, product improvements and enhancements, Badger Meter reserves the right to change product or system specifications without notice, except to the extent an outstanding contractual obligation exists. © 2014 Badger Meter, Inc. All rights reserved.

www.badgermeter.com

The Americas | Badger Meter | 4545 West Brown Deer Rd | PO Box 245036 | Milwaukee, WI 53224-9536 | 800-876-3837 | 414-355-0400
México | Badger Meter de las Americas, S.A. de C.V. | Pedro Luis Ogazón N°32 | Esq. Angelina N°24 | Colonia Guadalupe Inn | CP 01050 | México, DF | México | +52-55-5662-0882
Europe, Middle East and Africa | Badger Meter Europa GmbH | Nurtinger Str 76 | 72639 Neuffen | Germany | +49-7025-9208-0
Czech Republic | Badger Meter Czech Republic s.r.o. | Mařikova 2082/26 | 621 00 Brno, Czech Republic | +420-5-41420411
Slovakia | Badger Meter Slovakia s.r.o. | Racianska 109/B | 831 02 Bratislava, Slovakia | +421-2-44 63 83 01
Asia Pacific | Badger Meter | 80 Marine Parade Rd | 21-04 Parkway Parade | Singapore 449269 | +65-63464836
China | Badger Meter | 7-1202 | 99 Hangzhong Road | Minhang District | Shanghai | China 201101 | +86-21-5763 5412

TUR-CA-00152-EN-02 (January 2014)