Hydraulic Cylinders

HX 22 as per ISO 6022 (250 bar) series



CONCORD

CONCORD
Hydraulics Pvt. Ltd.
ISO : 9001 - 2008 CERTIFIED

CONCORD HYDRAULICS PVT. LTD. was established in the year 1982 at MUMBAI, with Erection and commissioning of Hydraulic systems as prime objective. Company is under able control of Technocrats having decades of association with the Pioneers in Oil Hydraulic industry in INDIA today. Company has grown since then and has progressed successfully in serving major core sector industries like Steel plants, Machine tools, Marine, Defence Organisation and many others.

Company have modern facilities and group of highly skilled technical staff to cater for all the important and technically challenging requirements of today's modern industry for design manufacturing of HYDRAULIC SYSTEMS, ERECTION and COMMISSIONING of High pressure and High flow hydraulic systems. Company also manufactures all types of tailor made Hydraulic and lubrication systems with components makes of your choice (Eaton-Vickers / Rexroth / Yuken / etc).

To cater for the all round requirement of industry under one roof, Company has diversified into various product range & started design and manufacturing of hydraulic and pneumatic cylinders in a separate factory also started small branches with various specialised services.

Hydraulic Cylinders
HX 22 as per ISO 6022 (250 bar) series

CONCORD

CONTENTS:

General Features 01

Mounting styles 03

Piston rod end characteristics 04

Single rod cylinder dimensions 06

Double rod cylinder dimensions 08

Port types 09

Port and cushion adjustment location 09

Rod piston diameter selection 10

Accessories 12

Tightening torque 14

Seals 15

How to order Concord Hydraulic cylinder 16

Special options 17

DEFINITIONS :

CYLINDER : Appliance which transforms fluid Energy in mechanical force and Rectilinear motion.

CYLINDER BORE: Cylinder internal diameter.

PISTON ROD: Tool which transforms mechanical force and piston movement.

MOUNTING TOOL: appliance to anchor the cylinder.

Hydraulic Cylinders
HX 22 as per ISO 6022 (250 bar) series

CONCORD

Hydraulic cylinders ISO 6022

Standard construction according to ISO 6022

Work pressure 250 BAR

11 bore sizes

24 rod diameters

6 mounting styles

Optional cushioning at the head and cap

Stroke untill 3000 mm

Male or female thread rod ends

Rounded head and cap

Standard BSP port connections, if required we can supply NPTF threaded ports or flange ports SAE.

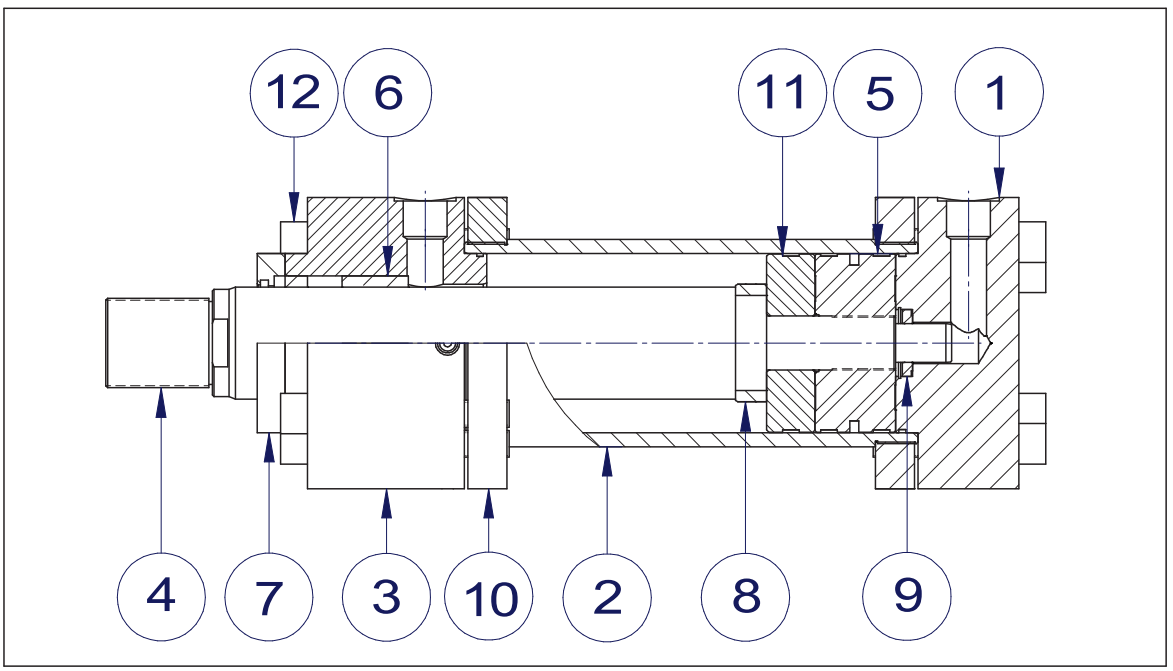

1 Cap

2 Cylinder body

3 Head

4 Piston rod

5 Piston

6 Bronze rod gland

7 Front flange

8 Front cushioning

9 Back cushioning

10 Retention

11 Stop tube for piston

12 Screw

CONCORD

CYLINDER BODY

High quality steel tube, cold wide drawing and yield point to 45 kg/mm^2 .
Internal high surface finish, max roughness 0,25 µ.

PISTON ROD

High quality steel, polished and chrome plated,diameter tolerance *f* 7and roughness 0,2 µ.
If required we can provide with special materials.

HEAD AND CAP ENDS

Made in steel, high level of precision to ensure maximum concentricity between them and the cylinder body.

PISTON

One-piece type, high quality steel. Particular attention for the concentricity, to ensure a good working for the seals.

SEALS

High quality gland, piston, head and cap ends sealsin nitrile (NBR), PTFE and polyurethane, compatible with the work fluid, temperature range between –10° + 90°C, max speed 0,6 m/s. If required, related to the work conditions, we can supply cylinders with fluorocarbon elastomer (FPM), PTFE or special mixture.

CUSHIONING

All cylinders can be provided with cushioning at the head and cap end, with progressive and controller deceleration. Valves are provided at both ends, to permit a precise cushion adjustment.

LIMITED STROKE

When the stroke is particularly long.
The recommended lenght is:
50 mm for strokes between 1000÷1500 mm
100 mm for strokes between 1500÷2000 mm
150 mm for strokes between 2000÷2500 mm
For longer strokes please contact our technical office.

CONCORD

MOUNTING STYLES

ISO 6022 mounting styles are:

-MS2: side lugs
-MF3: head round flange
-MF4: cap round flange
-MP3: cap fixed eye
-MP5: cap fixed eye with spherical bearing
-MT4: intermediate fixed trunnion.

In addition, it is possible to supply MS2 mounting style: side lugs not ascribed in ISO 6022 standards.

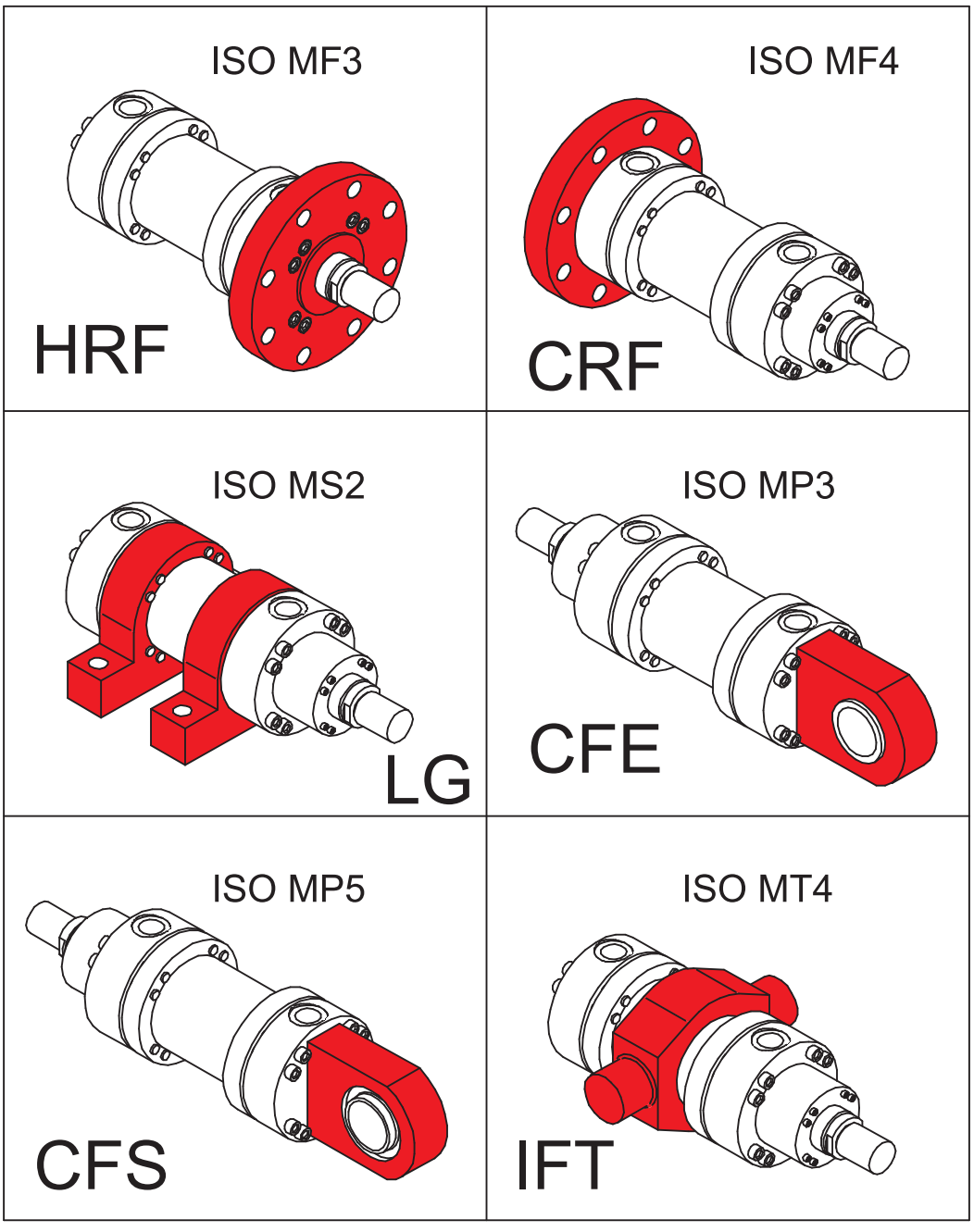

CONCORD

PISTON ROD END CHARACTERISTICS

MALE THREAD (M)

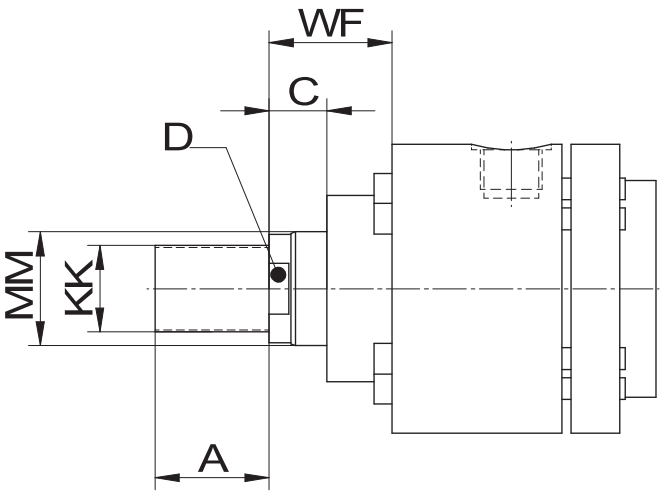

FEMALE THREAD (F)

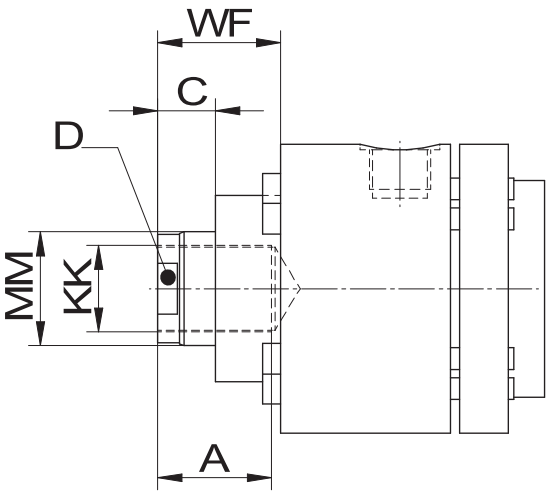

Bore Ø	MM	KK	A	WF	C	D
50	32 / 36	M27 x 2	36	47	22	28 / 30
63	40 / 45	M33 x 2	45	53	25	34 / 38
80	50 / 56	M42 x 2	56	60	28	43 / 48
100	63 / 70	M48 x 2	63	68	32	56 / 62
125	80 / 90	M64 x 3	85	76	36	70 / 80
140*	90 / 100	M72 x 3	90	76	36	80 / 85
160	100 / 110	M80 x 3	95	85	40	85 / 100
180*	110 / 125	M90 x 3	105	95	45	100 / 110
200	125 / 140	M100 x 3	112	101	45	110 / 120
250	160 / 180	M125 x 4	125	113	50	-
320	200 / 220	M160 x 4	160	136	56	-

Piston rod thread

Special thread:
If a different rod end thread is required, indicate the S in the cylinder, pointing the value of the required thread.

CONCORD

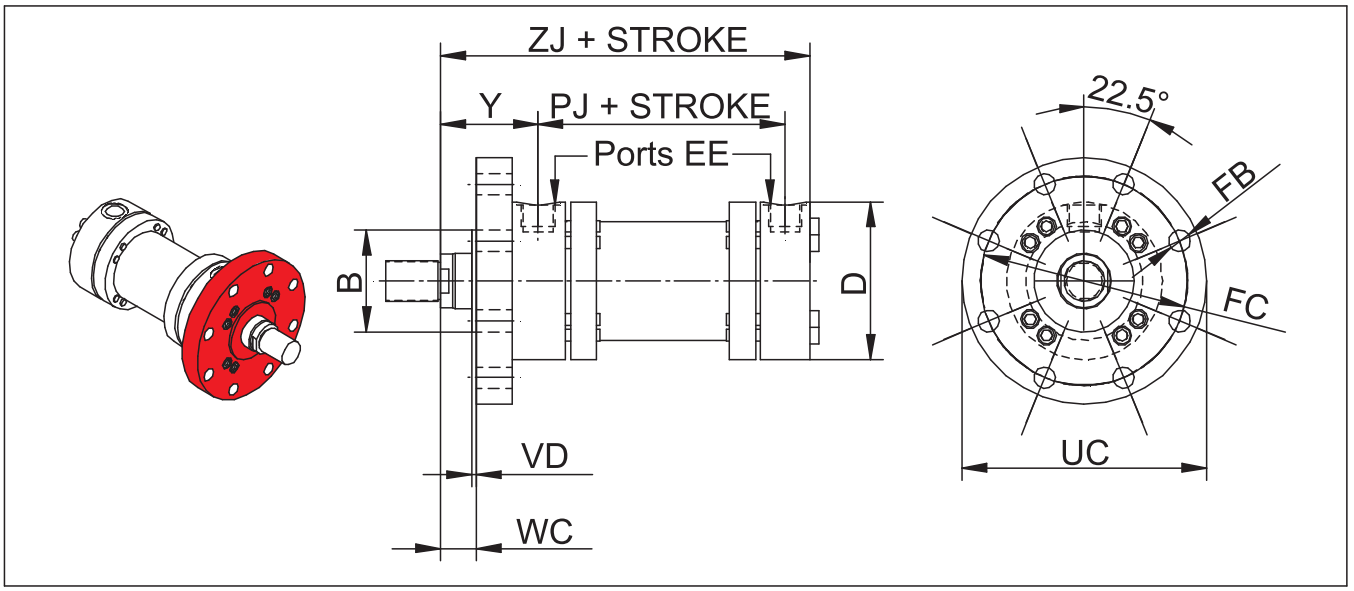

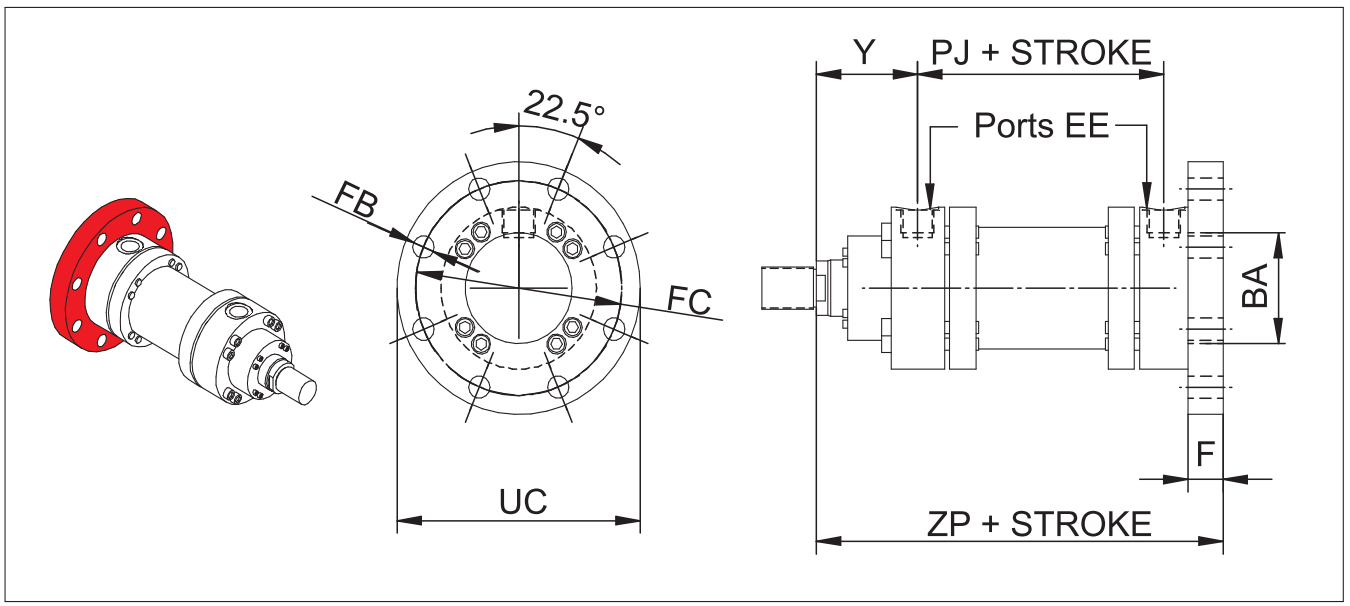

Bore Ø	MM	B/ BA	D	EE	F	FB	FC	PJ	UC	VD	WC	Y	ZJ	ZP
50	32 / 36	63	100	G1/2	25	13,5	132	120	155	4	22	98	240	265
63	40 / 45	75	115	G3/4	28	13,5	150	133	175	4	25	112	270	298
80	50 / 56	90	145	G3/4	32	17,5	180	155	210	4	28	120	307	332
100	63 / 70	110	160	G1	36	22	212	171	250	5	32	134	335	371
125	80 / 90	132	200	G1	40	22	250	205	290	5	36	153	390	430
140*	90 / 100	145	230	G1-1/4	40	26	300	208	340	5	36	181	425	465
160	100 / 110	160	260	G1-1/4	45	26	315	235	360	5	40	185	460	505
180*	110 / 125	185	280	G1-1/4	50	33	365	250	420	5	45	205	500	550
200	125 / 140	200	310	G1-1/4	56	33	385	278	440	5	45	220	540	596
250	160 / 180	250	390	G1-1/2	63	39	475	325	540	8	50	260	640	703
320	200 / 220	320	500	G2	80	45	600	350	675	8	56	310	750	830

CONCORD

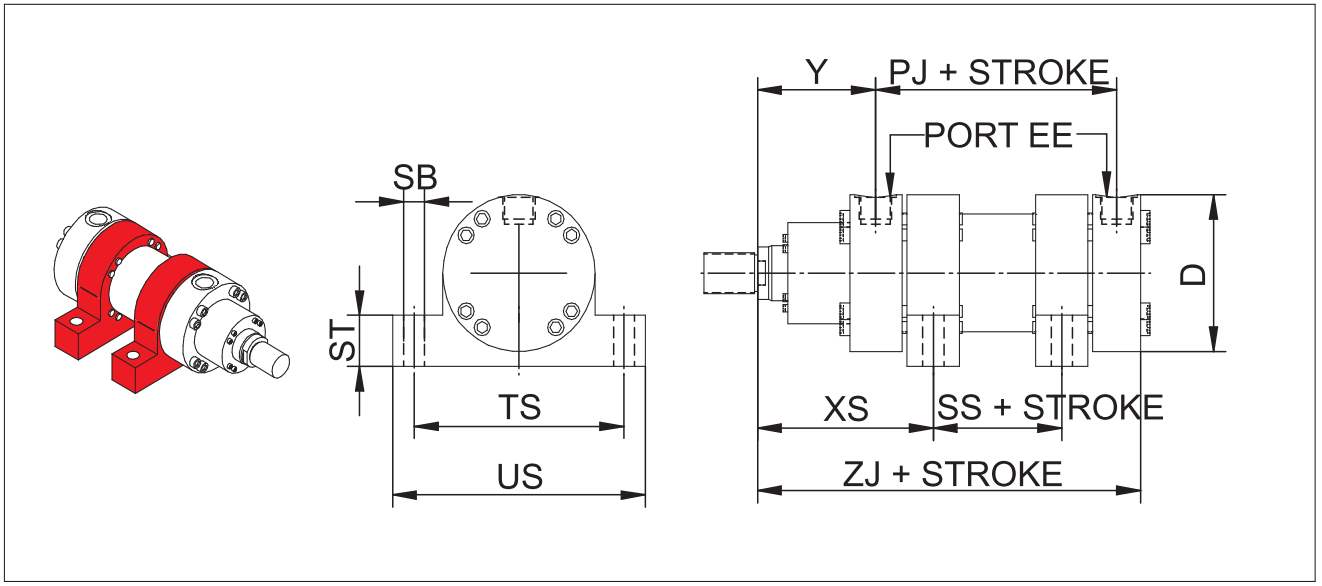

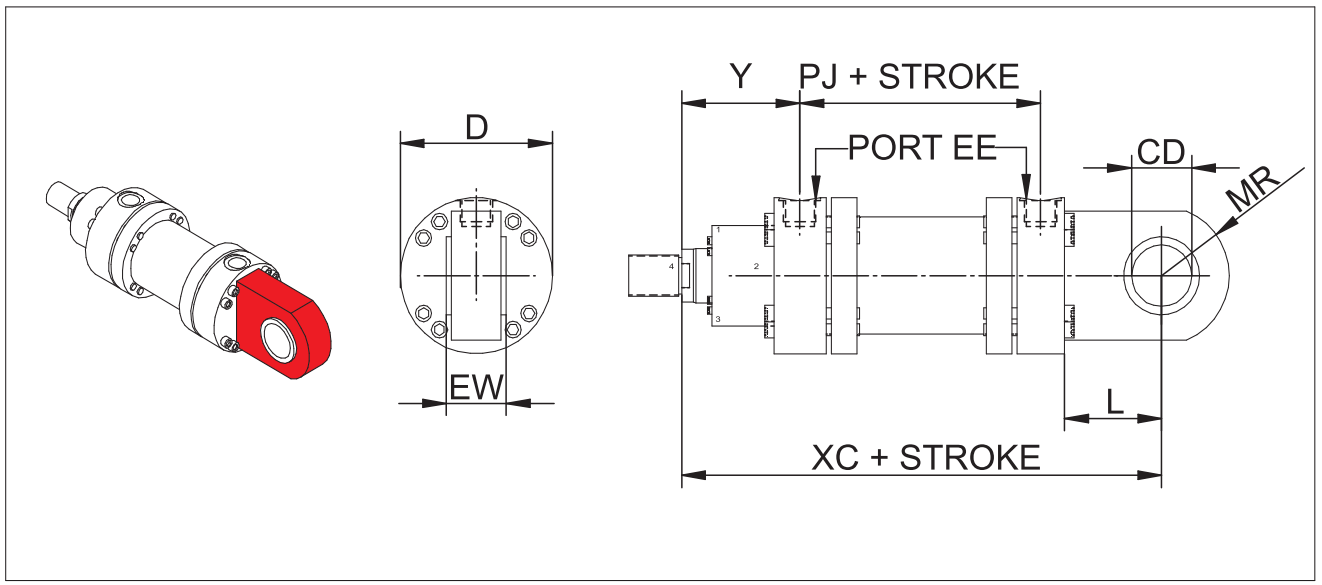

Bore	CD	D	EE	EW	L	MR	PJ	SB	SS	ST	TS	US	XC	XS	Y	ZJ
50	32	100	G1/2	32	61	38	120	11	55	32	135	160	305	130	98	240
63	40	115	G3/4	40	74	50	133	13,5	55	37	155	185	348	147,5	112	270
80	50	148	G3/4	50	90	61,5	155	17,5	55	42	185	225	395	170,5	120	307
100	63	175	G1	63	102	71	171	22	55	52	220	265	442	192,5	134	335
125	80	208	G1	80	124	90	205	26	60	62	270	325	520	230	153	390
140*	90	255	G1-1/4	90	150	100	208	30	61	77	325	390	580	254,5	181	425
160	100	270	G1-1/4	100	150	112	235	33	79	77	340	405	617	265,5	185	460
180*	110	315	G1-1/4	110	185	129	250	40	85	87	390	465	690	287,5	205	500
200	125	330	G1-1/4	125	206	145	278	40	90	87	405	480	756	315	220	540
250	160	412	G1-1/2	160	251	187	325	52	120	112	520	620	903	360	260	640
320	200	510	G2	200	316	241	350	62	120	152	620	740	1080	425	310	750

CONCORD

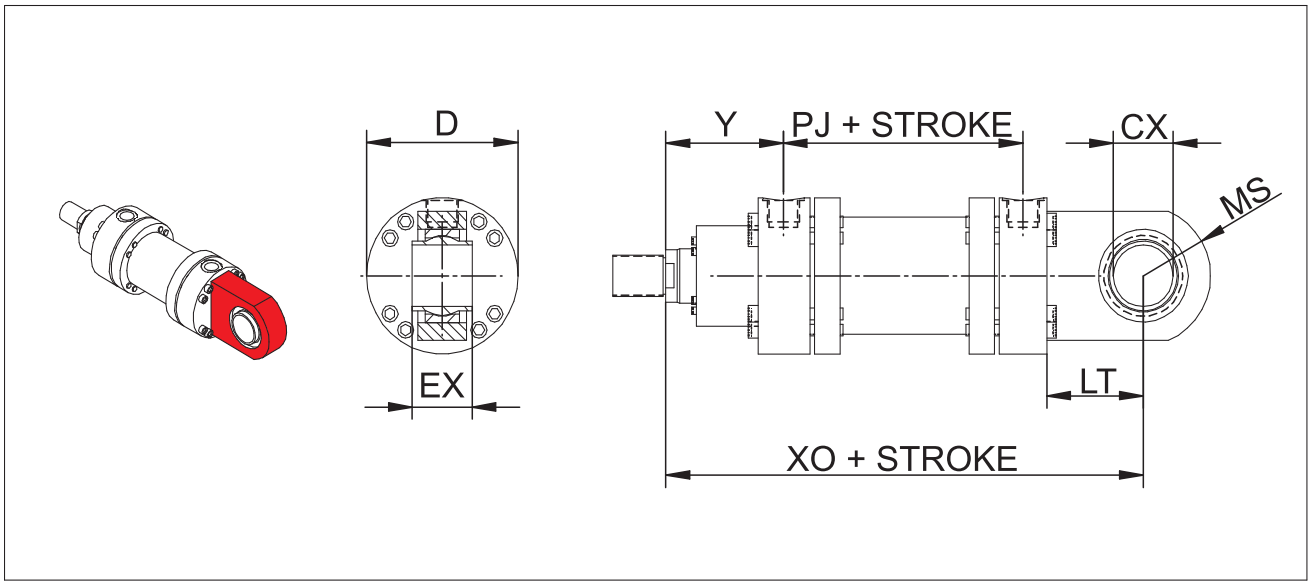

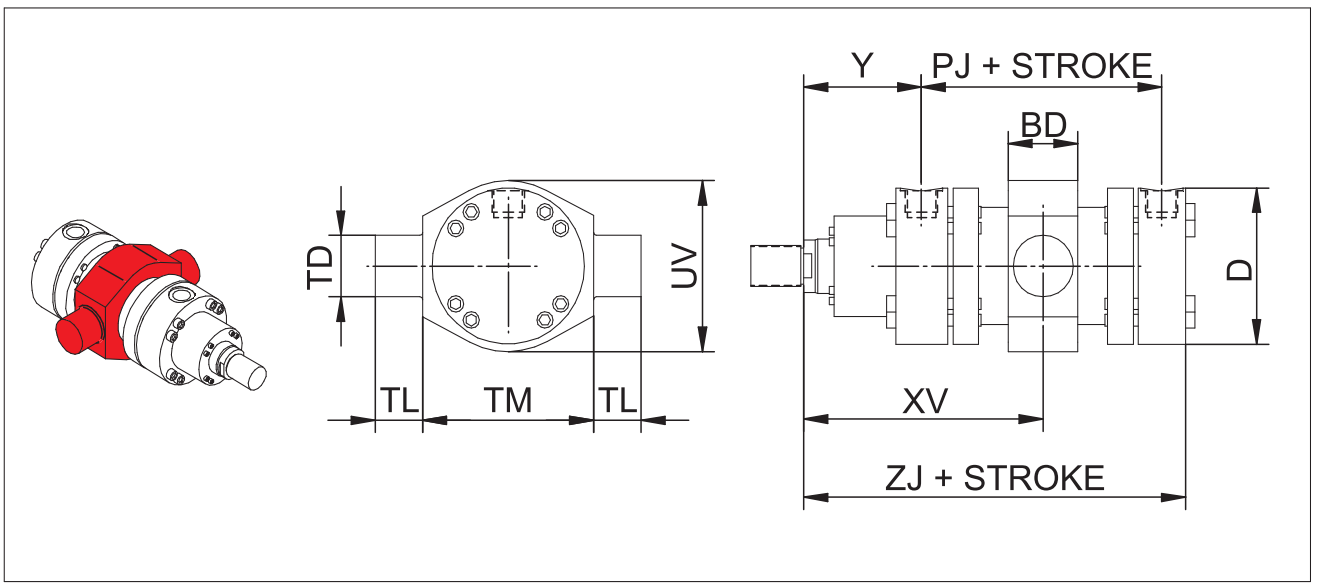

Bore Ø	BD	CX	D	EX	LT	MS	PJ	TD	TL	TM	UV	XO	XV	Y	ZJ
50	38	32	100	32	65	38	120	32	25	112	100	305	VARIABILE	98	240
63	48	40	115	40	69	50	133	40	32	125	115	348		112	270
80	58	50	145	50	88	61,5	155	50	40	150	145	395		120	307
100	70	63	160	63	107	71	171	63	50	180	165	442		134	335
125	88	80	200	80	130	90	205	80	63	224	200	520		153	390
140*	98	90	230	90	150	100	208	90	70	265	260	580		181	425
160	108	100	260	100	157	112	235	100	80	280	280	617		185	460
180*	118	110	280	110	185	129	250	110	90	320	315	690		205	500
200	133	125	310	125	210	145	278	125	100	335	330	756		220	540
250	178	160	390	160	263	187	325	160	125	425	420	903		260	640
320	218	200	500	200	330	241	350	200	160	530	510	1080		310	750

CONCORD

DOUBLE ROD CYLINDERS

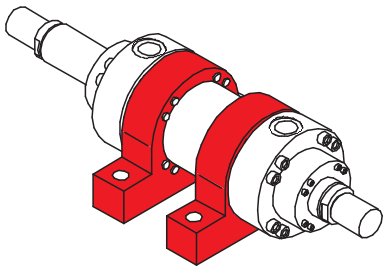

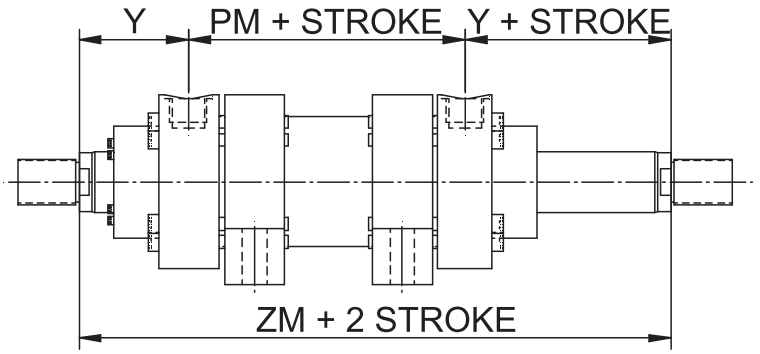

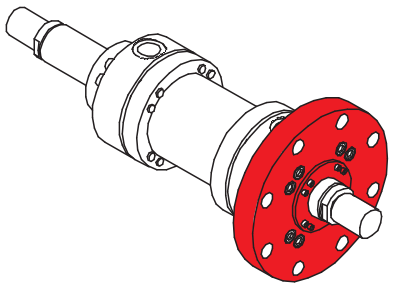

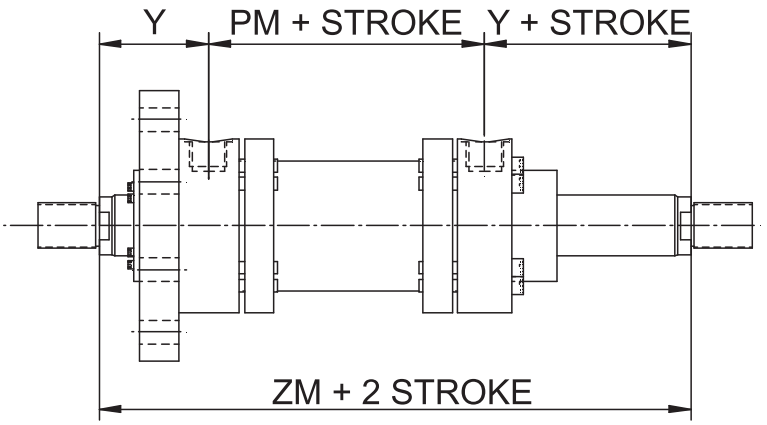

Ales.	Stelo	Y	PM	ZM
50	32 / 36	98	119	315
63	40 / 45	112	126	350
80	50 / 56	120	156	396
100	63 / 70	134	172	440
125	80 / 90	153	204	510
140*	90 / 100	181	208	570
160	100 / 110	185	240	610
180*	110 / 125	205	250	660
200	125 / 140	220	280	720
250	160 / 180	260	320	840
320	200 / 220	310	350	970

For double rod cylinders customer should indicate the desired mounting styles. Mounting styles available are A, C, E, M.

Dimensional informations not indicated in this prospect can be provided from previous corresponding table (single rod cylinders).

CONCORD

PORTS TYPES

Concord Hydraulics cylinders are supplied with BSP Standard threaded ports, according to ISO 6022. If required, we can provide metric threaded ports, NPTF, SAE 6000.

Bore	BSP threaded ports	Metric threaded ports	NPTF ports	Ports with flange SAE 6000
50	G1/2	M22x1,5	NPTF 1/2	SAE 6000 - 1/2
63	G3/4	M27x2	NPTF 3/4	SAE 6000 - 3/4
80	G3/4	M27x2	NPTF 3/4	SAE 6000 - 3/4
100	G1	M33x2	NPTF 1	SAE 6000 - 1
125	G1	M33x2	NPTF 1	SAE 6000 - 1
140*	G1-1/4	M42x2	NPTF 1-1/4	SAE 6000 - 1-1/4
160	G1-1/4	M42x2	NPTF 1-1/4	SAE 6000 - 1-1/4
180*	G1-1/4	M42x2	NPTF 1-1/4	SAE 6000 - 1-1/4
200	G1-1/4	M42x2	NPTF 1-1/4	SAE 6000 - 1-1/4
250	G1-1/2	M48x2	NPTF 1-1/2	SAE 6000 - 1-1/2
320	G2	M60x2	NPTF 2	SAE 6000 - 2

If required it is possible to provide cylinders with oversize ports. In these cases, cylinder dimensions can change. For more informations, customer should contact our technical department.

PORTS AND CUSHION ADJUSTMENT LOCATION

The table below shows standard positions of the ports and the cushion adjustment for Concord Hydraulics cylinders. All cylinders are provided with air-bleed.

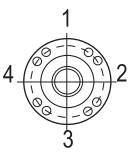

		Mounting style			
		C-D	E	F-H	M
Head	Connection port	1	1	1	1
	Cushion	2	2	2	2
	Check valve	4	4	4	4
	Air bleed	3	3	3	3
Cap	Connection port	1	1	1	1
	Cushion	2	2	2	2
	Check valve	4	4	4	4
	Air bleed	3	3	3	3

If limit switch sensors are required, the locations indicate above can change, according to customer specifications.

ROD PISTON DIAMETER SELECTION

When the cylinder works in pushing it is suggested to verify if the peak load is adequate. To do this, the steps are the followings. The first thing is to determine the constant k, related to the mounting style that is required:

Type of Mounting	Stroke Factor
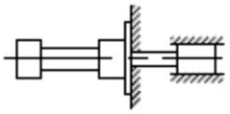	0.5
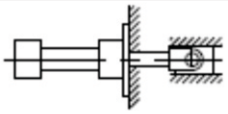	0.7
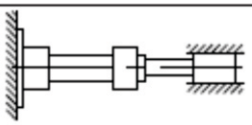	1.0
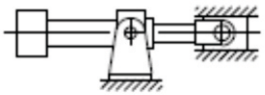	1.0
	1.5
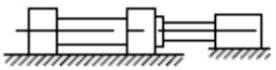	2.0
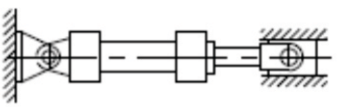	2.0
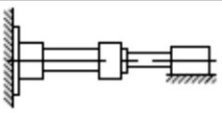	4.0
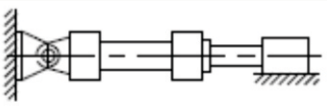	4.0

Calculate the basic length L:

$$L = k * \text{stroke}$$

Calculate the thrust by multiplying the bore area per the work pressure.

CONCORD

BORE (mm)	PUSH AREA (mm²)	Push force (kN)					
		50 bar	75 bar	100 bar	160 bar	250 bar	320 bar
50	1963	9,82	14,73	19,63	31,42	49,09	62,83
63	3117	15,59	23,38	31,17	49,88	77,93	99,75
80	5027	25,13	37,70	50,27	80,42	125,66	160,85
100	7854	39,27	58,90	78,54	125,66	196,35	251,33
125	12272	61,36	92,04	122,72	196,35	306,80	392,70
140	15394	76,97	115,45	153,94	246,30	384,85	492,60
160	20106	100,53	150,80	201,06	321,70	502,65	643,40
180	25447	127,23	190,85	254,47	407,15	636,17	814,30
200	31416	157,08	235,62	314,16	502,65	785,40	1005,31
250	49087	245,44	368,16	490,87	785,40	1227,18	1570,80
320	80425	402,12	603,19	804,25	1286,80	2010,62	2573,59

Interpolating L with the thrust calculate before, it's possible to define the point of intersection, from the following chart:

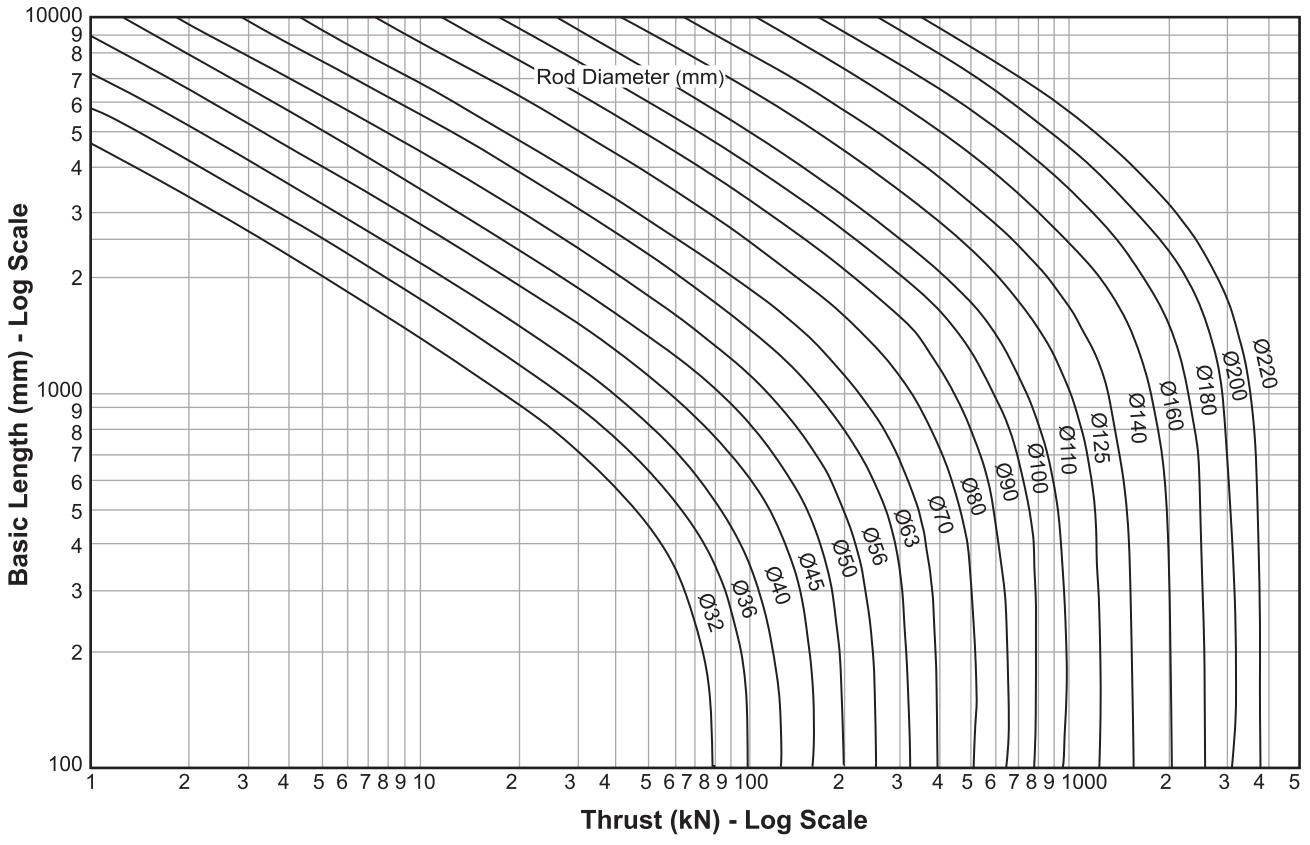

CONCORD

Rod Clevis and Pivot Pin

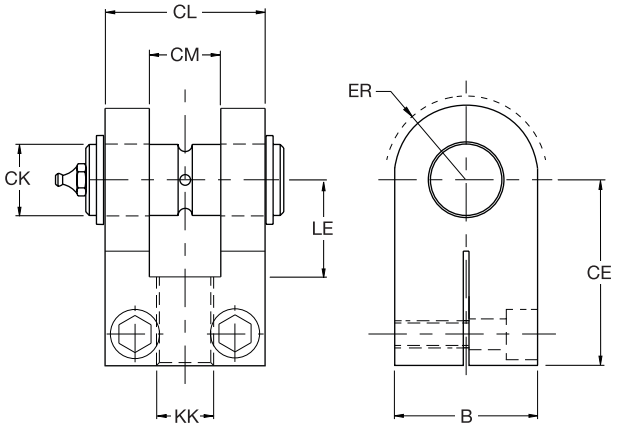

B	CE js13	CK H9/f8	CL h16	CM A13	ER max	KK	LE min	Mass kg	Force kN
65	80	32	70	32	40	M27x2	41	2.2	50
80	97	40	90	40	50	M33x2	51	4.4	80
100	120	50	110	50	63	M42x2	63	7.6	125
120	140	63	140	63	71	M48x2	75	17.7	200
140	180	80	170	80	90	M64x3	94	30.6	320

Rod Eye with Spherical Bearing

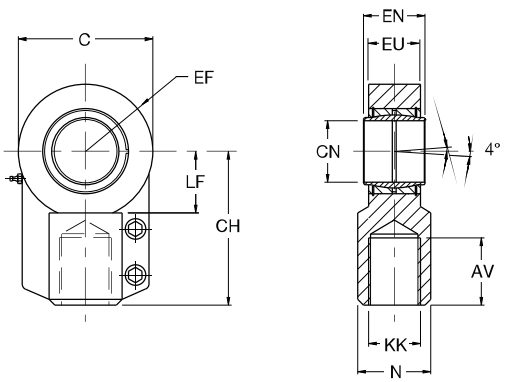

AV min	C max	CH js13	CN H7	EF max	EN h12	EU max	KK	LF min	N max	Mass kg	Force kN
37	72	80	32	40	32	28	M27x2	30	38	1.2	50
46	90	97	40	50	40	34	M33x2	39	47	2.1	80
57	110	120	50	63	50	42	M42x2	47	58	4.4	125
64	136	140	63	72.5	63	53.5	M48x2	58	70	7.6	200
86	170	180	80	92	80	68	M64x3	74	91	14.5	320
96	212	210	100	114	100	85.5	M80x3	94	110	28	500
113	265	260	125	160	125	105	M100x3	116	135	43	800
126	326	310	160	200	160	133	M125x4	145	165	80	1250
161	420	390	200	250	200	165	M160x4	190	215	170	2000

CONCORD

Clevis Bracket and Pivot Pin

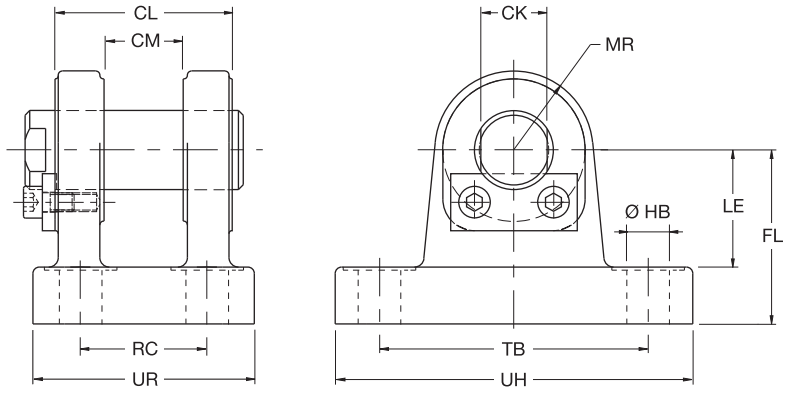

CK H9/m6	CL h16	CM A13	FL JS12	HB H13	LE min	MR max	RC JS14	TB JS14	UH max	UR max	Mass kg	Force kN
32	70	32	65	17.5	43	32	50	110	143	85	3.5	50
40	90	40	76	22	52	40	65	130	170	108	6	80
50	110	50	95	26	65	50	80	170	220	130	12	125
63	140	63	112	33	75	63	100	210	270	160	19	200
80	170	80	140	39	95	80	125	250	320	210	38	320

Mounting Bracket and Pivot Pin

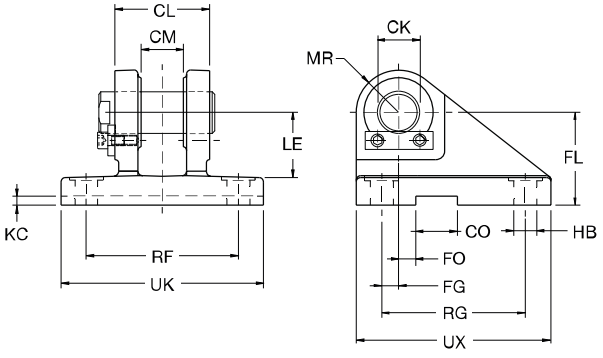

CK H9/m6	CL h16	CM A13	CO N9	FG JS14	FL js13	FO JS14	HB H13	KC +0.3	LE min	MR max	RF js13	RG js13	UK max	UX max	Mass kg	Force kN
32	70	32	25	14.5	65	6	17.5	5.4	43	32	110	110	145	145	5	50
40	90	40	36	17.5	76	6	22	8.4	52	40	140	125	185	170	9.6	80
50	110	50	36	25	95	–	26	8.4	65	50	165	150	215	200	15.5	125
63	140	63	50	33	112	–	33	11.4	75	63	210	170	270	230	27.5	200
80	170	80	50	45	140	–	39	11.4	95	80	250	210	320	280	47	320

CONCORD

TIGHTENING TORQUE

For Concord mill type cylinders', bolts of minimum strength grade 8.8 are used and the tightening torque applied are showed in the table below:

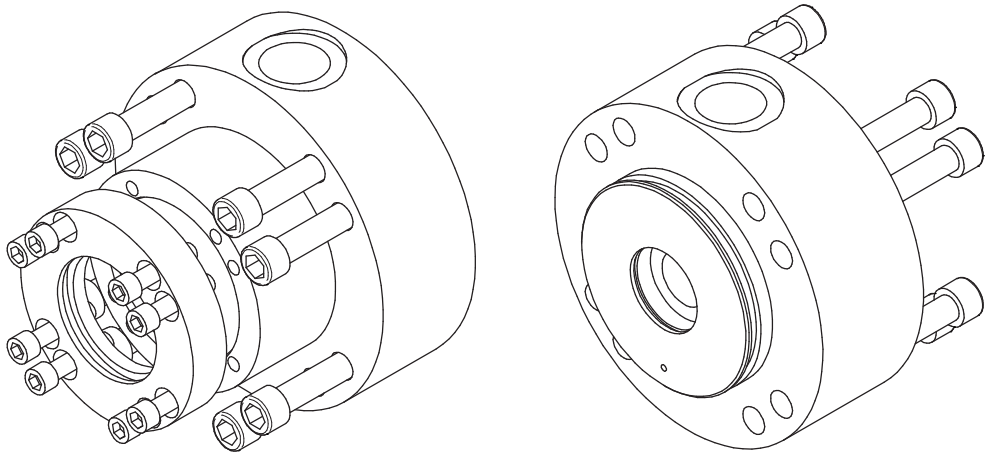

BORE	SCREW	QUAN-TITY	GRADE	TIGHTENING TORQUE (Nm)	RETEINER SCREWS	GRADE	TIGHTENING TORQUE (Nm)
50	M8	8	8.8	30	M6	8.8	7
63	M10	8	8.8	50	M6	8.8	7
80	M12	8	8.8	70	M8	8.8	30
100	M12	8	8.8	70	M8	8.8	30
125	M16	8	8.8	150	M8	8.8	30
140	M20	8	8.8	245	M8	8.8	30
160	M24	8	8.8	500	M10	8.8	50
180	M24	8	8.8	500	M12	8.8	70
200	M27	8	8.8	650	M12	8.8	70
250	M27	12	8.8	650	M12	8.8	70
320	M30	16	8.8	900	M16	8.8	150

CONCORD

GASKETS CHARACTERISTICS

Seals should be chosen according to work conditions of the environment where the cylinder operates, paying particular attention to the fluid characteristics and the temperature. The table below shows the suggested material for the seals, according to the working conditions of the cylinder:

MATERIAL	CHARACTERISTICS	TEMPERATURE	FLUID
NBR + polyurethane	High performances in static/dynamic conditions	-30°C ÷ + 70°C	Mineral oil HH, HL, HLP, HLP-D, HM, HV
NBR + PTFE	Low friction	-30°C ÷ + 70°C	Mineral oil, HFA, HFC, HFD-U
FKM + PTFE	Low friction -	-20°C ÷ + 120°C	Mineral oil, HFA, HFB,

SEALS KITS

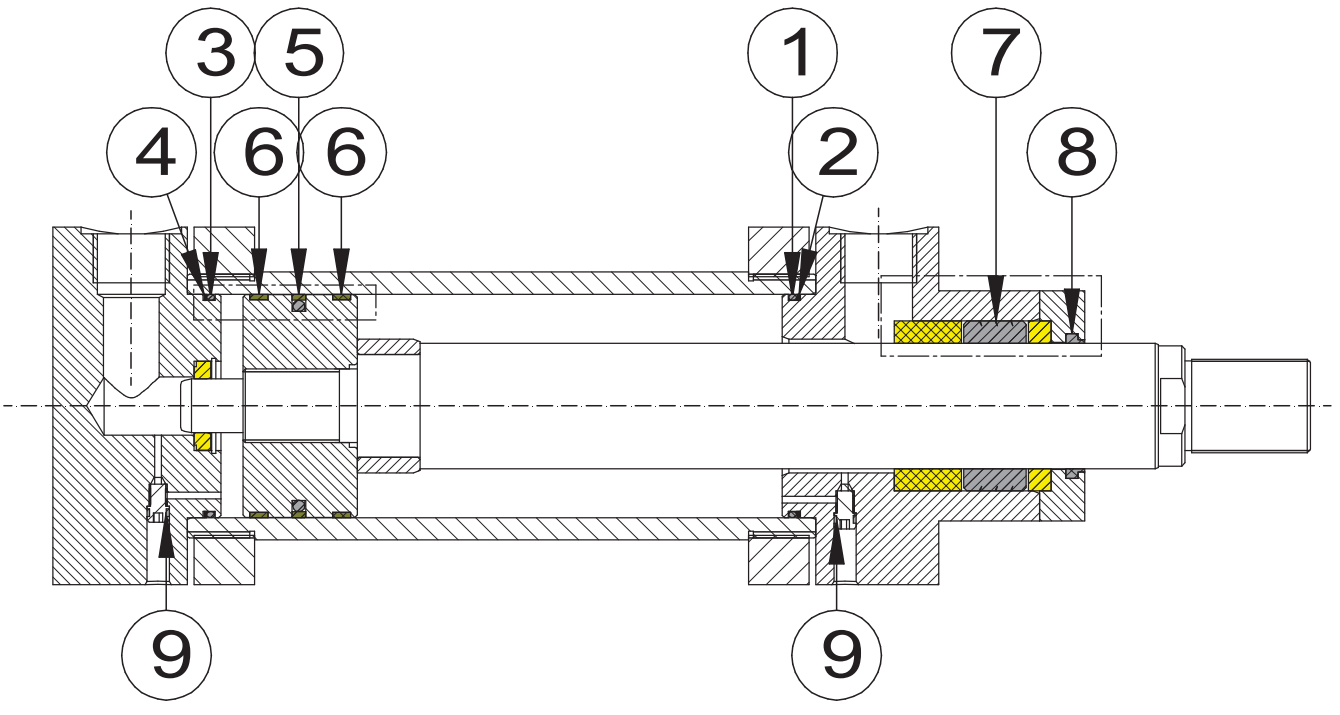

1 Head O-ring
2 Head back-up washer
3 Cap O-ring
4 Cap back-up washer
5 Piston seal
6 PTFE wear ring
7 Lipseal
8 Wipe seal
9 Cushioning valve O-ring + back-up washer

CONCORD

HOW TO ORDER CONCORD HYDRAULIC CYLINDER - HX22 SERIES (ISO 6022)

HX22	*080*	*036*	*0500*	*WC*	*TM*	*MP3*	*S*

BORE :

Specify Bore Ø in mm (indicate in 3 figures)

ROD :

Specify Rod Ø in mm (indicate in 3 figures)

STROKE :

Specify the Stroke length in mm (indicate in 4 figures)

CUSHIONING :

WC : Without Cushioning
FC : Front Cushioning
RC : Rear Cushioning
BC : Both End Cushioning

ROD END :

TM : MALE THREAD
TF : FEMALE THREAD
TS : Any other thread (specify separately spl. thread)

MOUNTING TYPE : (Please Refer to Page No. 3)

LG : side lugs
HRE : head round flange
CRF : cap round flange
CFE : cap fixed eye
CFS : cap fixed eye with spherical bearing
IFT : intermediate fixed trunnion.

SPECIAL EXECUTIONS :

S : Indicate the change from the standard (see page 19)

CONCORD

SPECIAL EXECUTIONS (indicate the required special executions)

S = special executions

V	T	SA	SP	BL	ST	C



FMK seals

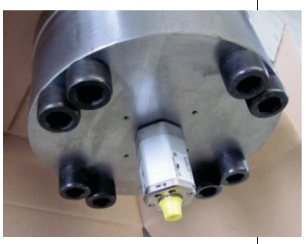

Linear transducer

Head limit switch sensor

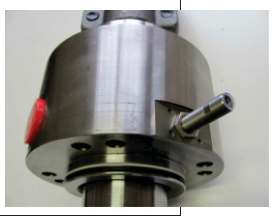

Cap limit switch sensor

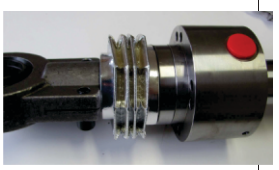

Heat resistant bellow

SPACER :

2 : 50 mm
4 : 100 mm
6 : 150 mm
8 : 200 mm

Stop tube lengths will be according to cylinder strokes & other designs can be supplied according to application requirements;

Connection ports (if not standard)

CONCORD

HOW TO ORDER CONCORD CYLINDERS ?

PLEASE PROVIDE ALL INFORMATION CORRECTLY AS REQUIRED .
TICK MARK √ WHICHEVER IS APPLICABLE.

1. CYLINDER TYPE REQUIRED - DOUBLE ACTING / SINGLE ACTING / RAM TYPE

2. CYLINDER TYPE REQUIRED - DOUBLE ROD / SINGLE ROD

3. CYLINDER CONSTRUCTION TYPE REQUIRED - WELDED / TIE-ROD

4. CYLINDER WORKING POSITION - VERTICAL / HORIZONTAL / INCLINED

5. CYLINDER MAXIMUM WORKING PRESSURE - _____ Kg / Cm^2

6. TYPE & MAGNITUDE OF LOADING - PUSH / PULL / BOTH , PUSH LOAD _____KG / PULL LOAD_____KG.

7. CYLINDER BORE SIZE - SPECIFY IN CM _____ / CHPL TO SELECT

8. CYLINDER ROD SIZE - SPECIFY IN CM _____ / CHPL TO SELECT

9. CYLINDER STROKE - _____ CM

10. CYLINDER MAXIMUM WORKING SPEED - _____CM / Min (in load direction)

11. CYLINDER MAXIMUM WORKING SPEED - _____CM / Min (in return stroke)

12. CYLINDER OIL CONNECTIONS - _____ / CHPL TO SELECT

13. CYLINDER MOUNTING TYPE REQUIRED - FOOT MOUNTING / FRONT FLANGE / REAR FLANGE / MID TRUNNION / MALE CLEVIS ON BOTH ENDS / FEMALE CLEVIS ON BOTH ENDS / PL.SPECIFY IF ANY OTHER TYPE

14. ROD END TYPE –THREADED - THREAD SIZE x LENGTH =_____ x ___ MM

OR

MALE CLEVIS ON ROD END / FEMALE CLEVIS ON ROD END/ PL.SPECIFY IF ANY SPECIAL MOUNTING .

15. MOUNTING DIMENSIONS - DIMENSIONAL DETAILS PROVIDED ALONG WITH THIS SHEET / AS PER ANY KNOWN STANDARD _____ / AS CHPL STANDARD

16. CYLINDER APPLICATION - FOR NEW MACHINERY / REPLACEMENT / REVAMP / INDUSTRIAL / MOBILE / MARINE /IF SPECIAL SPECIFY

17. SPECIFY TEMP. CONDITIONS - OIL _____°C / AMBIENT _____°C

CONCORD

NOTS

CONCORD

OUR OTHER PRODUCTS

HYDRAULIC CYLINDERS



HYDRAULIC POWER PACK & SYSTEMS

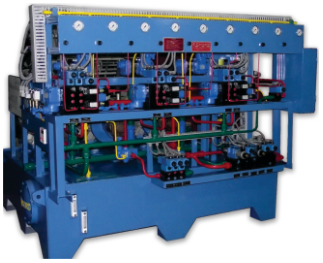



PORTABLE FILTRATION UNIT

PIPES FITTINGS, FLANGES AND CLAMPS



HYDRAULIC POWER PACKS



BLOCK ASSEMBLIES

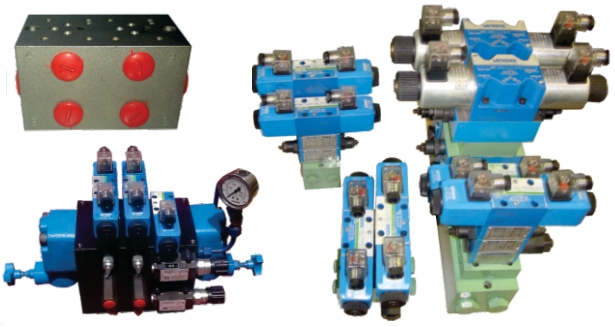

COMPONENTS, ACCESSORIES & SPARES

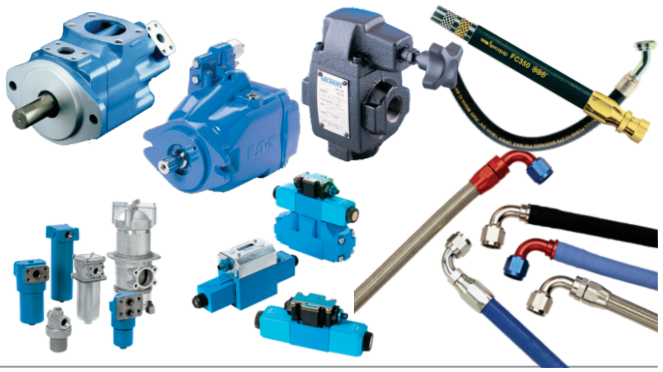





ACCUMULATOR STATION



HYDRAULIC VALVE STANDS

INSTALLATION AND COMMISSIONING





CONCORD
Hydraulics Pvt. Ltd.
ISO : 9001 - 2008 CERTIFIED

HEAD OFFICE
5/73, Ashirwad Industrial Estate, Ram Mandir Road,
Goregaon (W), Mumbai - 400 104.
Ph : 022-26763772 | 022-26794705

MANUFACTURING UNITS
Unit No.15/16, Sheetal Shrusti Indl. Estate,
Bialalpada, Vasai (E) - 401 208,
Dist. Thane, Maharashtra, INDIA
Ph : +91-0250-6450331/6450674/6069100

Plot No. A3, Sector - 1,
The Vasai Taluka Indl. Co-Op. Estate Ltd.,
Gauraipada Road, Village - Bilalpada,
Vasai (E) - 401 208, Dist. Thane, Maharashtra, INDIA
Ph : +91-0250-2450038

Email: support@concordhydraulics.com | concordhydraulic@gmail.com
convasai@gmail.com | sales@concordhydraulics.com

Web : www.concordhydraulics.com

Follow us on :