Hydraulic Cylinders

HX 02 as per ISO 6020/2 (160 bar) series

Tie Rod Cylinders



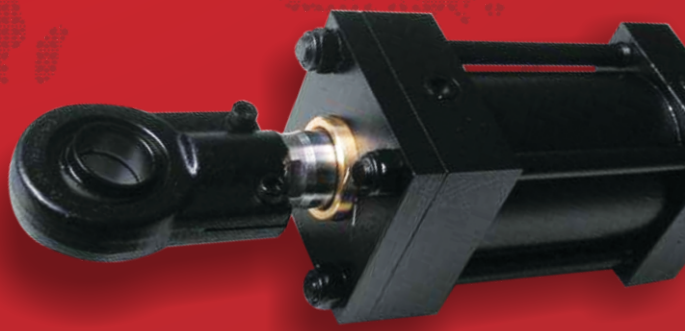

CONCORD

CONCORD
Hydraulics Pvt. Ltd.
ISO : 9001 - 2008 CERTIFIED

CONCORD HYDRAULICS PVT. LTD. was established in the year 1982 at MUMBAI, with Erection and commissioning of Hydraulic systems as prime objective. Company is under able control of Technocrats having decades of association with the Pioneers in Oil Hydraulic industry in INDIA today. Company has grown since then and has progressed successfully in serving major core sector industries like Steel plants, Machine tools, Marine, Defence Organisation and many others.

Company have modern facilities and group of highly skilled technical staff to cater for all the important and technically challenging requirements of today's modern industry for design manufacturing of HYDRAULIC SYSTEMS, ERECTION and COMMISSIONING of High pressure and High flow hydraulic systems. Company also manufactures all types of tailor made Hydraulic and lubrication systems with components makes of your choice (Eaton-Vickers / Rexroth / Yuken / etc).

To cater for the all round requirement of industry under one roof, Company has diversified into various product range & started design and manufacturing of hydraulic and pneumatic cylinders in a separate factory also started small branches with various specialised services.

CONTENTS:

General Features 01
Mounting styles 03
Piston rod end charactersitics 04
Single rod cylinder dimensions 06
Double rod cylinder dimensions 09
Port types 10
Port and cushion adjustment location 10
Rod piston diameter selection 11
Accessories 13
Tie rod nuts torque 16
Seals 17
How to order Concord Hydraulic cylinder 18
Special options 19

DEFINITIONS :

CYLINDER : Appliance which transforms fluid Energy in mechanical force and Rectilinear motion.

CYLINDER BORE: Cylinder internal diameter.

PISTON ROD: Tool which transforms mechanical force and piston movement.

MOUNTING TOOL: Appliance to anchor the cylinder.

Hydraulic Cylinders
HX 02 as per ISO 6020/2 (160 bar) series

Tie Rod Cylinders

CONCORD

Hydraulic cylinders ISO 6020/II

Standard construction according to ISO 6020/II

Work pressure 160 BAR

Rated pressure 250 BAR

10 Bore sizes

12 Rod diameters

12 Mounting styles

Optional cushioning at the head and cap

Stroke to 3000 mm

Standard male or female rod ends

Squared head and cap

Standard BSP Ports, if require we can supply NPTF threaded ports or Flange Ports SAE

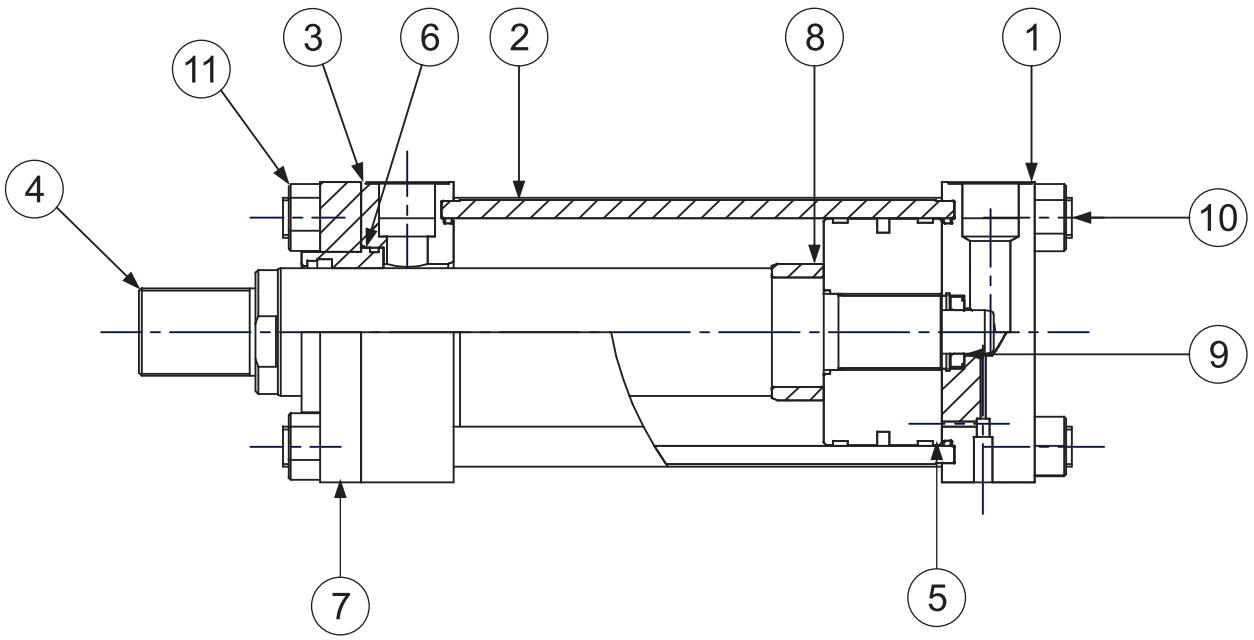

1 Cap	5 Piston	9 Back cushioning
2 Body	6 Bronze rod gland	10 Tie Rod
3 Head	7 Front flange	11 Nut
4 Piston rod	8 Front cushioning	

CYLINDER BODY

High quality steel tube, cold wide drawing and yield point to 45 kg/mm^2.
Internal high surface finish, max roughness 0,25 µ.

PISTON ROD

High quality steel, polished and chrome plated, diameter tolerance *f*7 and roughness 0,2 µ.
IF required we can provide with special materials.

HEAD AND CAP ENDS

Made in steel, high level of precision to ensure maximum concentricity between them and the cylinder body.

PISTON

One-Pieces type, high quality steel. Particual attention for the concentricity, to ensure a good working for the seals.

SEALS

High quality gland, piston, head and cap ends seals in nitrile (NBR), PTFE and polyurethane, compatible with the work fluid, temperature range between -10° + 90°C, max speed 0,6 m/s. If requied, related to the work conditions, we can supply cylinders with fluorocarbon elastomer (FPM), PTFE or special mixture.

CUSHIONING

All cylinders can be provided with cushioning at the head and cap end, with progressive and controller deceleration. Valves are provided at both ends, to permit a precise cushion adjustment.

LIMITED STROKE

When the stroke is particularly long.
The recommended lenght is:
50 mm for strokes between 1000÷1500 mm
100 mm for strokes between 1500÷2000 mm
150 mm for strokes between 2000÷2500 mm
For longer strokes please contact our technical office.

MOUNTING STYLES

ISO 6020/2 mounting styles are:

-MX3: tie rod extended head end
-MX2: tie rod extended cap end
-MX1: tie rod extended both ends
-ME5: head rectangular flange
-ME6: cap rectangular flange
-MS2: side lugs
-MP3: cap fixed eye
-MP1: cap fixed clevis
-MP5: cap fixed eye with spherical bearing
-MT1: head trunnion
-MT2: back trunnion
-MT4: intermediate fixed trunnion

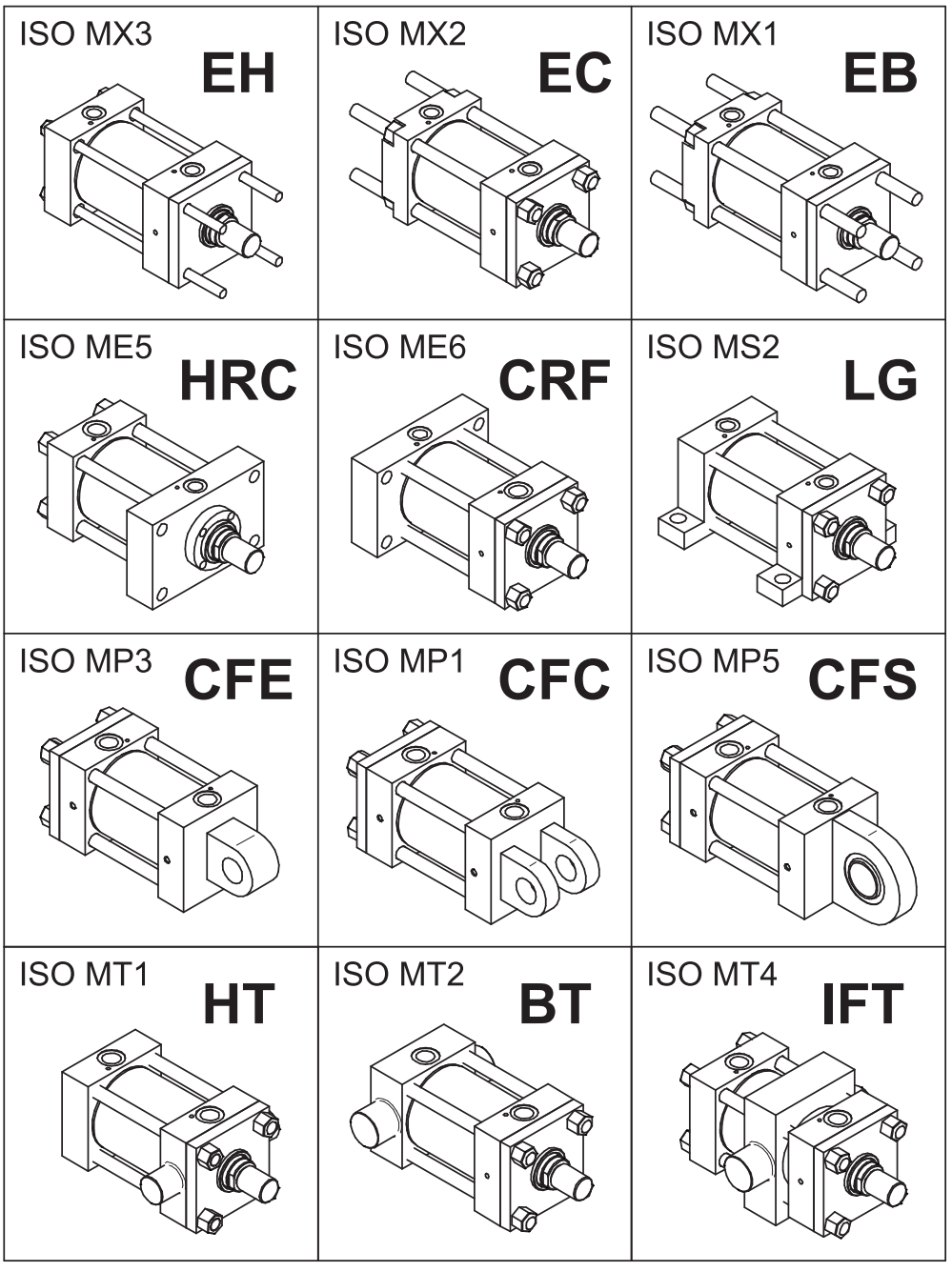

PISTON ROD END CHARACTERISTICS

PISTON ROD END DIMENSIONS

Bore Ø	Piston rod	KK	KF[1]	A	B f9	C	D	F	WF	VD	RD f8
25	12	M 10x1,25	M 8x1	14	24	9	10	10	25	6	38
	18	M 14x1,5	M 12x1,25	18	30	9	15	10	25	6	38
32	14	M 12x1,25	M 10x1,25	16	26	13	12	10	35	12	42
	22	M 16x1,5	M 16x1,5	22	34	13	18	10	35	12	42
40	18	M 14x1,5	M 12x1,25	18	30	13	15	10	35	12	62
	28	M 20x1,5	M 20x1,5	28	42	13	22	10	35	12	62
50	22	M 16x1,5	M 16x1,5	22	34	16	18	16	41	9	74
	28*	M 20x1,5	M 20x1,5	28	42	16	22	16	41	9	74
	36	M 27x2	M 27x2	36	50	16	30	16	41	9	74
63	28	M 20x1,5	M 20x1,5	28	42	19	22	16	48	13	75
	36*	M 27x2	M 27x2	36	50	19	30	16	48	13	75
	45	M 33x2	M 33x2	45	60	19	38	16	48	13	88
80	36	M 27x2	M 27x2	36	50	22	30	20	51	9	82
	45*	M 33x2	M 33x2	45	60	22	38	20	51	9	88
	56	M 42x2	M 42x2	56	72	22	48	20	51	9	105
100	45	M 33x2	M 33x2	45	60	25	38	22	57	10	92
	56*	M 42x2	M 42x2	56	72	25	48	22	57	10	105
	70	M 48x2	M 48x2	63	88	25	62	22	57	10	125
125	56	M 42x2	M 42x2	56	72	25	48	22	57	10	105
	70*	M 48x2	M 48x2	63	88	25	62	22	57	10	125
	90	M 64x3	M 64x3	85	108	25	80	22	57	10	150
160	70	M 48x2	M 48x2	63	88	25	62	25	57	7	125
	90*	M 64x3	M 64x3	85	108	25	80	25	57	7	150
	110	M 80x3	M 80x3	95	133	25	100	25	57	7	170
200	90	M 64x3	M 64x3	85	108	25	80	25	57	7	150
	110*	M 80x3	M 80x3	95	133	25	100	25	57	7	170
	140	M 100x3	M 100x3	112	163	25	128	25	57	7	210

MALE THREAD (M)

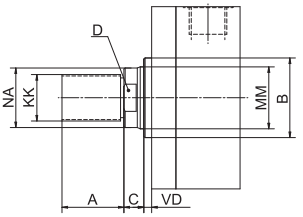

FEMALE THREAD (F)

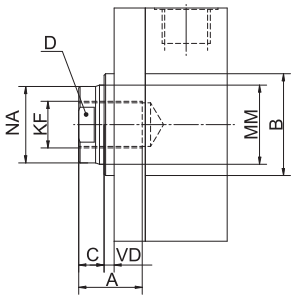

MALE THREAD (M)

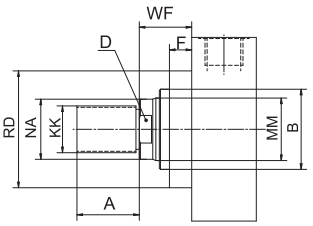

FEMALE THREAD (F)

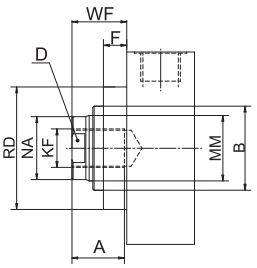

Dimensions given are approximate figures / Dimensions subject to change!

* Special execution

[1] Starting from bore size 160, it is not possible to have a stroke length less then 50mm, if the rod end is a female thread.

In particular for mounting style C (ISO ME5):

Piston rod thread Special thread :

If a different rod end thread is required,

indicate the S in the cylinder, pointing value of the required thread.

A - ISO MX3

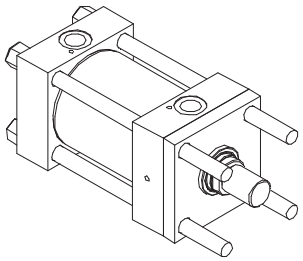

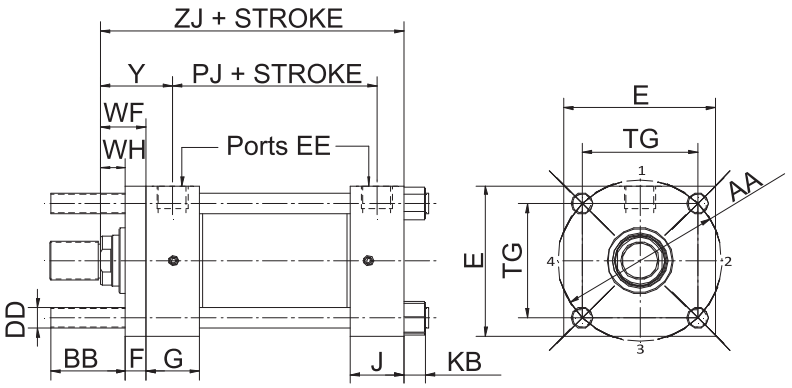

B-ISO MX2

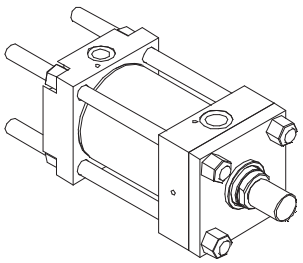

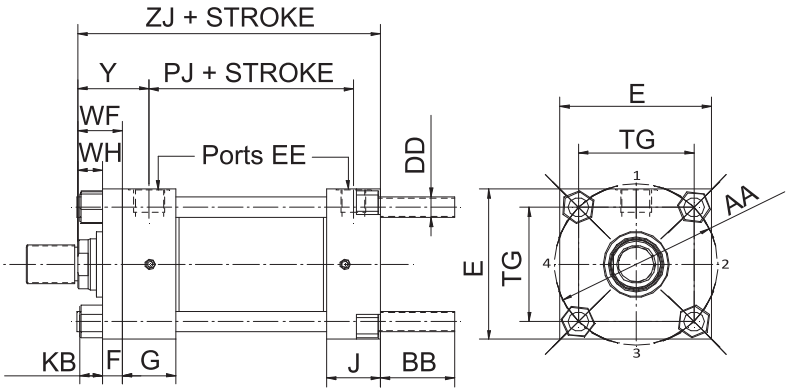

AB-ISO MX1

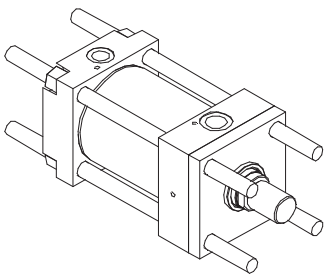

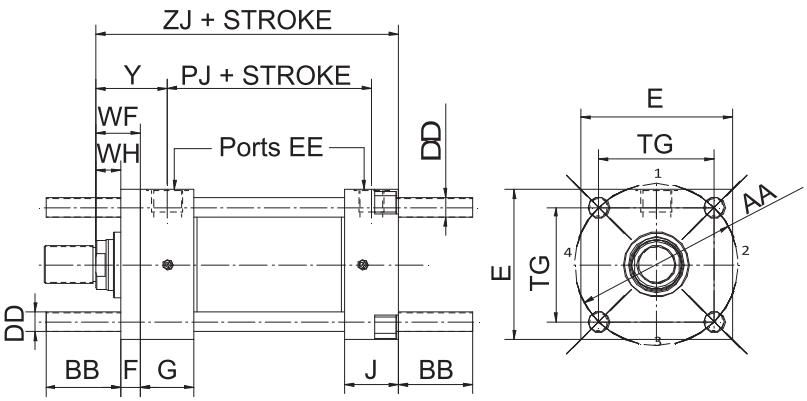

Bore	AA	BB	DD	EE	E	TG	G	J	F	WH	Y	PJ	ZJ
25	40	19	M5x0,8	G 1/4	40	28,3	40	25	10	15	50	53	114
32	47	24	M6x1	G 1/4	45	33,2	40	25	10	25	60	56	128
40	59	35	M8x1.25	G 3/8	63	41,7	45	38	10	25	62	73	153
50	74	46	M12x1.75	G 1/2	75	52,3	45	38	16	25	67	74	159
63	91	46	M12x1.75	G 1/2	90	64,3	45	38	16	32	71	80	168
80	117	59	M16x2.0	G 3/4	115	82,7	50	45	20	31	77	93	190
100	137	59	M16x2.0	G 3/4	130	96,9	50	45	22	35	82	101	203
125	178	81	M22x2.0	G 1	165	125,9	58	58	22	35	86	117	232
160	219	92	M27x2.0	G 1	205	154,9	58	58	25	32	86	130	245
200	269	115	M30x2.0	G 1 1/4	245	190,2	76	76	25	32	98	165	299

C-ISO ME5

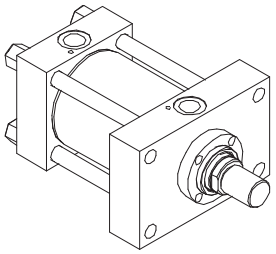

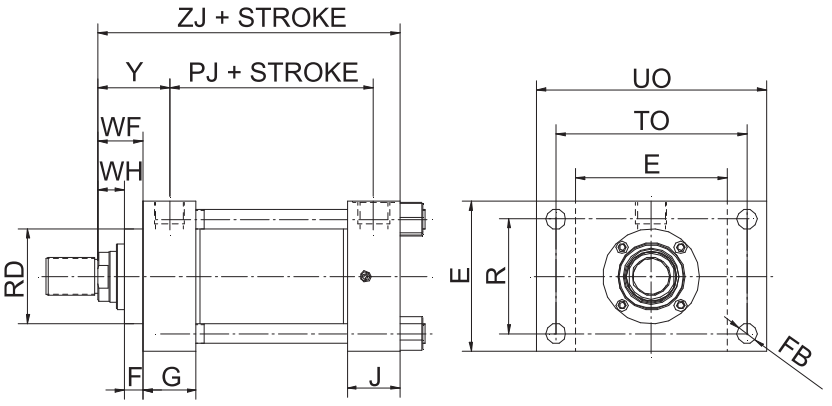

D-ISO ME6

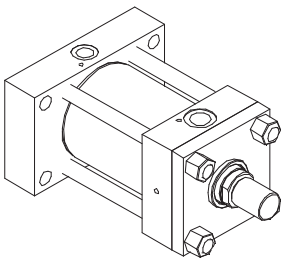

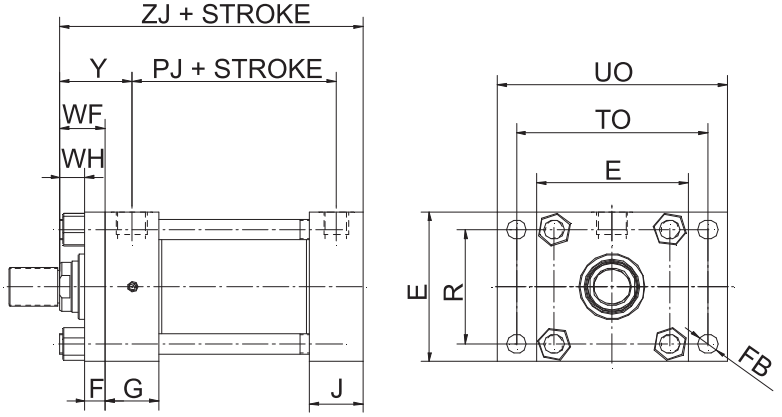

E-ISO MS2

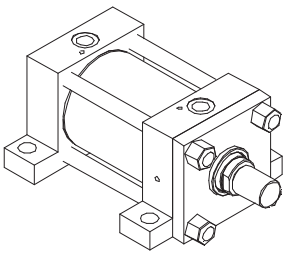

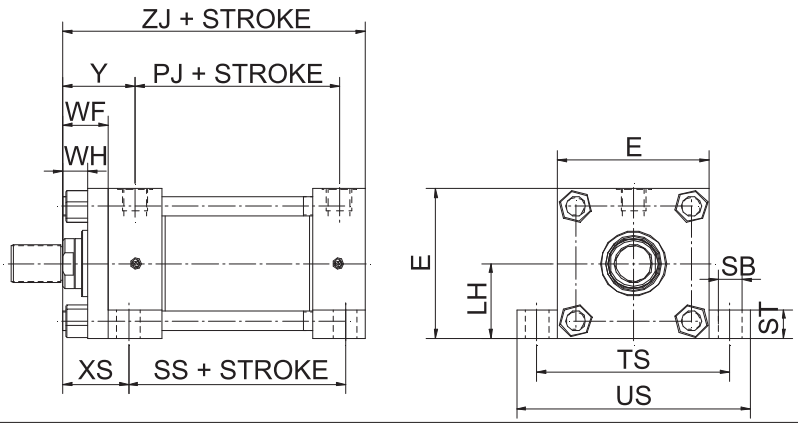

Bore	EE	R	UO	TO	FB	XS	SS	LH	TS	US	SB	ST	Y	PJ	ZJ
25	G 1/4	27	65	51	5,5	33	73	19	54	72	6,6	8,5	50	53	114
32	G 1/4	33	70	58	6,6	45	73	22	63	84	9	12,5	60	56	128
40	G 3/8	41	110	87	11	45	98	31	83	103	11	12,5	62	73	153
50	G 1/2	52	130	105	14	54	92	37	102	127	14	19	67	74	159
63	G 1/2	65	145	117	14	65	86	44	124	161	18	26	71	80	168
80	G 3/4	83	180	149	18	68	105	57	149	186	18	26	77	93	190
100	G 3/4	97	200	162	18	79	102	63	172	216	26	32	82	101	203
125	G 1	126	250	208	22	79	131	82	210	254	26	32	86	117	232
160	G 1	155	300	253	26	86	130	101	260	318	33	38	86	130	245
200	G 1 1/4	190	360	300	33	92	172	122	311	381	39	44	98	165	299

F-ISO MP3

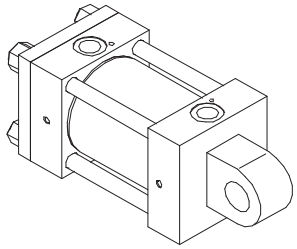

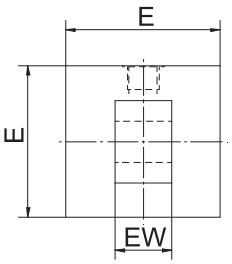

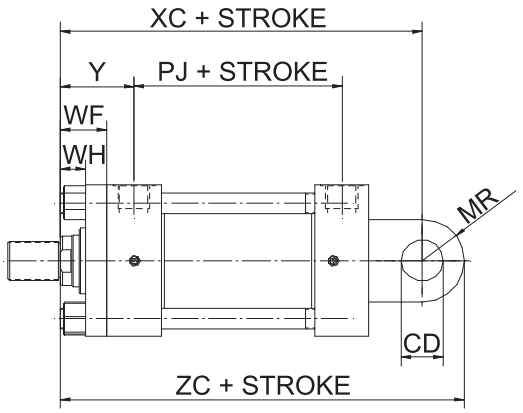

G-ISO MP1

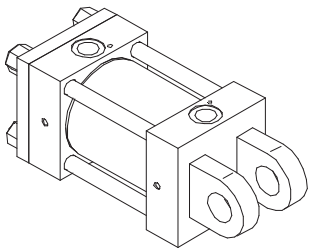

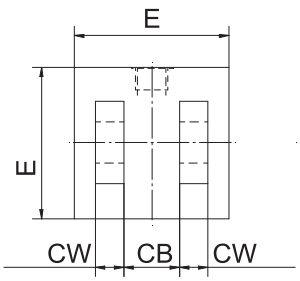

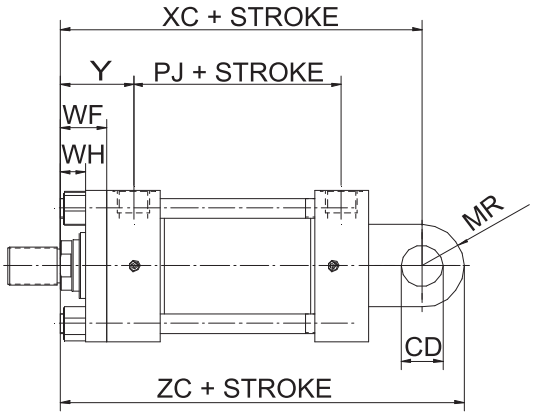

H-ISO MP5

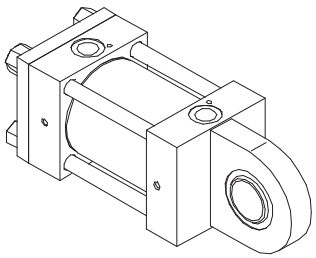

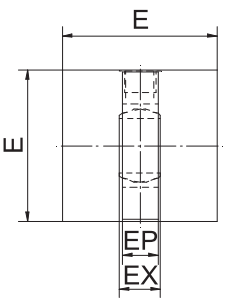

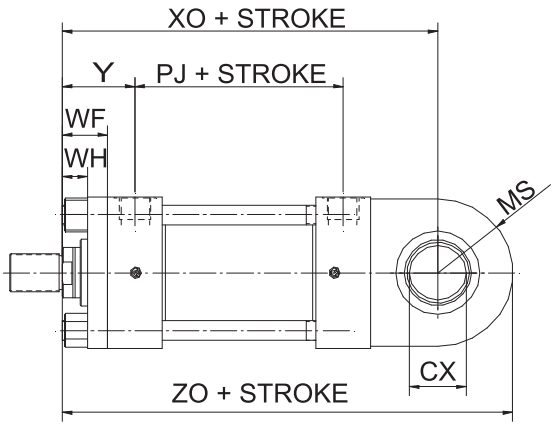

Bore	CD	MR	XC	ZC	EW	CW	CB	CX	MS	XO	ZO	EP	EX	Y	PJ
25	10	12	127	139	12	6	12	12 -0,008	20	130	150	8	10 -0,12	50	53
32	12	17	147	164	16	8	16	16 -0,008	22	148	170	11	14 -0,12	60	56
40	14	17	172	189	20	10	20	20 -0,012	29	178	207	13	16 -0,12	62	73
50	20	29	191	220	30	15	30	25 -0,012	33	190	223	17	20 -0,12	67	74
63	20	29	200	229	30	15	30	30 -0,012	40	206	246	19	22 -0,12	71	80
80	28	34	229	263	40	20	40	40 -0,012	50	238	288	23	28 -0,12	77	93
100	36	50	257	307	50	25	50	50 -0,012	62	261	323	30	30 -0,12	82	101
125	45	53	289	342	60	30	60	60 -0,015	80	304	384	38	44 -0,15	86	117
160	56	59	308	367	70	35	70	80 -0,015	100	337	437	47	55 -0,15	86	130
200	70	78	381	459	80	40	80	100 -0,02	120	415	535	57	70 -0,20	98	165

I-ISO MT1

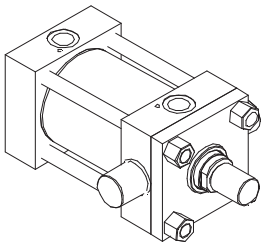

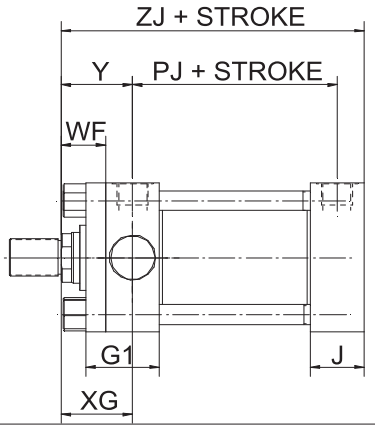

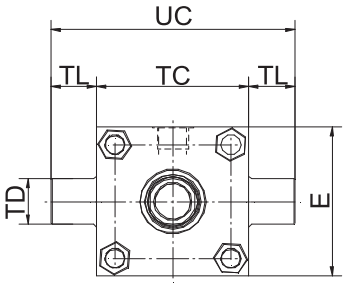

L-ISO MT2

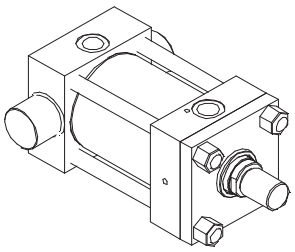

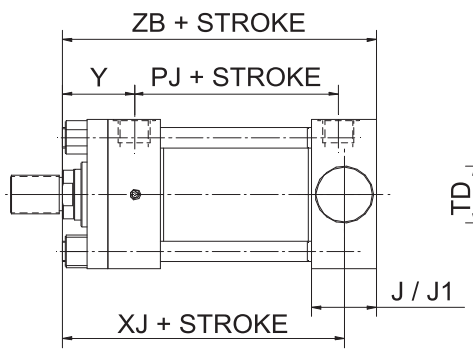

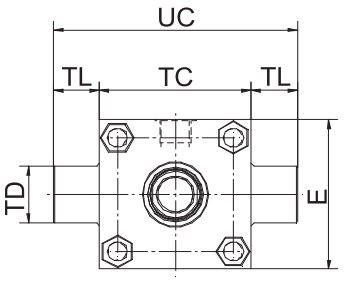

M-ISO MT4

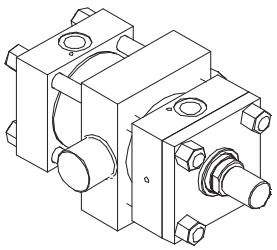

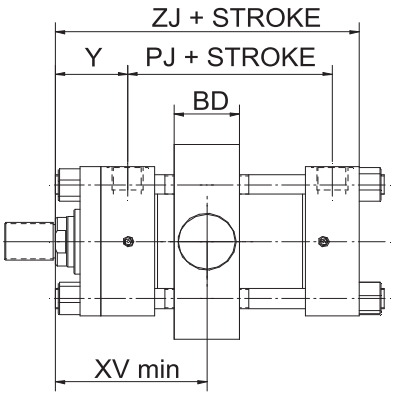

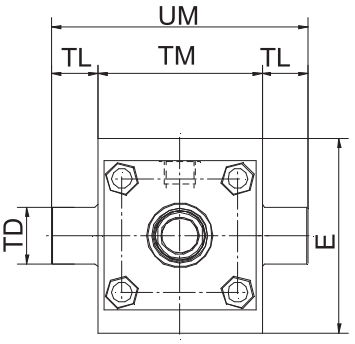

Bore	BD	F	G	G1	J	J1	PJ	TC	TD	TL	TM	UC	UM	UW	XG	XJ	XV min	Y	ZB
25	20	10	40	-	25	-	53	38	12	10	48	58	68	63	44	101	82	50	121
32	25	10	40	-	25	-	56	44	16	12	55	68	79	75	54	115	96	60	137
40	30	10	45	-	38	-	73	63	20	16	76	95	108	92	57	134	107	62	166
50	40	16	45	-	38	-	74	76	25	20	89	116	129	112	64	140	117	67	176
63	40	16	45	-	38	-	80	89	32	25	100	139	150	126	70	149	132	71	185
80	50	20	50	-	45	50	93	114	40	32	127	178	191	160	76	168	147	77	212
100	60	22	50	72	45	58	101	127	50	40	140	207	220	180	71	187	158	82	225
125	73	22	58	80	58	71	117	165	63	50	178	265	278	215	75	209	180	86	260
160	90	25	58	88	58	88	130	203	80	63	215	329	341	260	75	230	198	86	279
200	110	25	76	108	76	108	165	241	100	80	279	401	439	355	85	276	226	98	336

DOUBLE ROD CYLINDERS

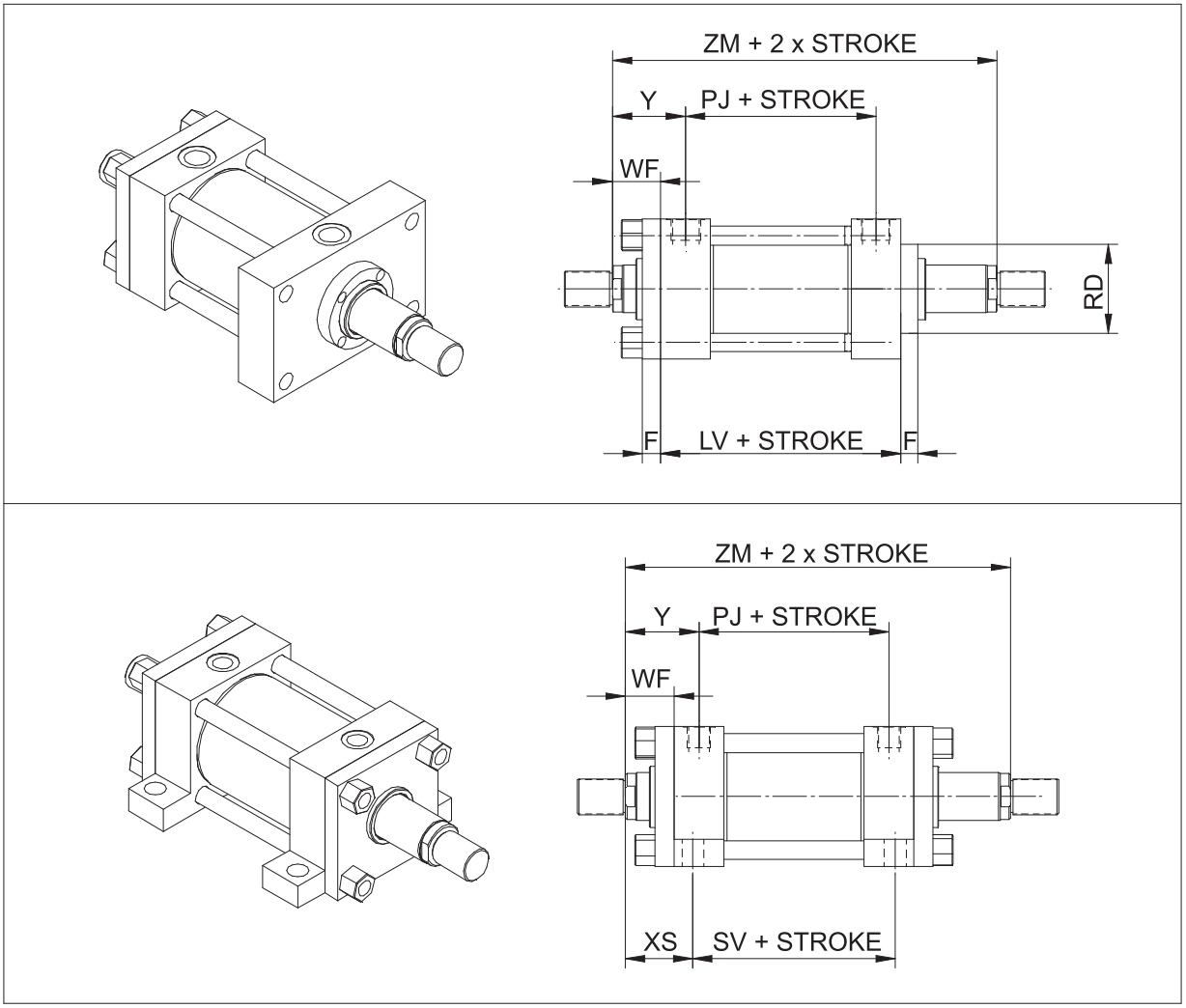

Bore	LV	XS	SV	Y	PJ	ZM
25	105	33	88	50	55	154
32	110	45	88	60	60	178
40	125	45	105	62	71	195
50	125	54	99	67	73	207
63	127	65	93	71	81	223
80	144	68	110	77	92	246
100	151	79	107	82	101	265
125	175	79	131	86	117	289
160	188	86	130	86	130	302
200	242	92	172	98	160	356

For double rod cylinder customer should indicate the desire mounting styles. Mounting styles available are A, C, E, I & M.

Dimensional informations not indicated in thie prospect can be provided from previous corresponding tables (single rod cylinders).

PORTS TYPES

CONCORD HYDRUALICS Cylinders are supplied with BSP standard threaded ports, according to ISO 6020/2. If required , we can provide metric threaded ports, NPTF, SAE 3000.

Bore	BSP threaded ports	Metric threaded ports	NPTF ports	Ports with flange SAE 3000
25	G 1/4	M14x1,5	NPTF 1/4	-
32	G 1/4	M14x1,5	NPTF 1/4	-
40	G 3/8	M18x1,5	NPTF 3/8	-
50	G 1/2	M22x1,5	NPTF 1/2	SAE 3000 - 1/2
63	G 1/2	M22x1,5	NPTF 1/2	SAE 3000 - 1/2
80	G 3/4	M27x2	NPTF 3/4	SAE 3000 - 3/4
100	G 3/4	M27x2	NPTF 3/4	SAE 3000 - 3/4
125	G 1	M33x2	NPTF 1	SAE 3000 - 1
160	G 1	M33x2	NPTF 1	SAE 3000 - 1
200	G 1 1/4	M42x2	NPTF 1 1/4	SAE 3000 - 1 1/4

If required it is possible to provide cylinders with oversize ports. in these cases, cylinder dimensions can change. For more informations, customer should contact our technical department.

PORTS AND CUSHION ADJUSTMENT LOCATION

The table below shows standard positions of the ports and the cushion adjustment of CONCORD Hydraulics cylinders. All cylinders are provided with air bleed.

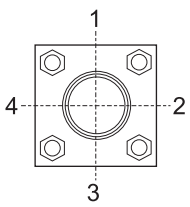

		Mounting style				
		A-B-AB-M	**C-D**	**E**	**F-G-H**	**I-L**
Head	Connection port	1	1	1	1	1
	Cushion, check valve, air bleed	2	3	2	2	3
Cap	Connection port	1	1	1	1	1
	Cushion, check valve, air bleed	2	3	2	2	3

If limit switch sensors are required, the locations indicate above can change, according to customers specifications.

ROD PISTON DIAMETER SELECTION

When the cylinder works in pushing it is suggested to verify if the peak load is adequate. To do this, the steps are the followings. The first thing is to determine the constant k, related to the mounting style that is required:

Type of Mounting	Stroke Factor
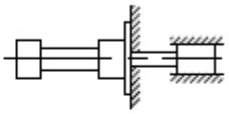	0.5
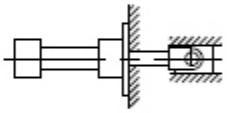	0.7
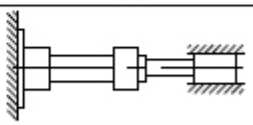	1.0
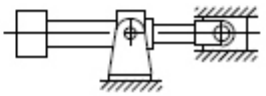	1.0
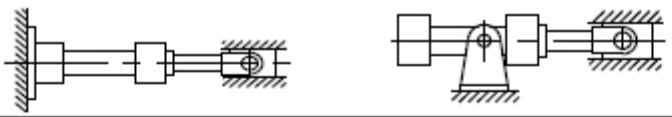	1.5
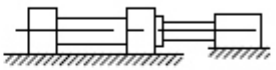	2.0
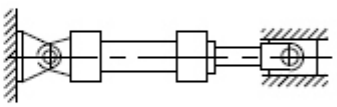	2.0
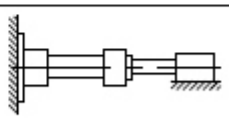	4.0
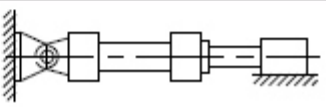	4.0

Calculate the basic length L:

$$L = k * \text{stroke}$$

Calculate the thrust by multiplying the bore area per the work pressure.

		Push force (kN)					
BORE (mm)	PUSH AREA (mm)	50 bar	75 bar	100 bar	125 bar	160 bar	210 bar
25	491	2,45	3,68	4,91	6,14	7,85	10,31
32	804	4,02	6,03	8,04	10,05	12,87	16,89
40	1257	6,28	9,42	12,57	15,71	20,11	26,39
50	1963	9,82	14,73	19,63	24,54	31,42	41,23
63	3117	15,59	23,38	31,17	38,97	49,88	65,46
80	5027	25,13	37,70	50,27	62,83	80,42	105,56
100	7884	39,27	58,90	78,54	98,17	125,66	164,93
125	12272	61,36	92,04	122,72	153,40	196,35	257,71
160	20160	100,53	150,80	201,06	251,33	321,70	422,23
200	31416	157,08	235,62	314,16	392,70	502,65	659,73

Interpolating L with the thrust calcuate before, it's possible to define the point of intersection, from the following chart :

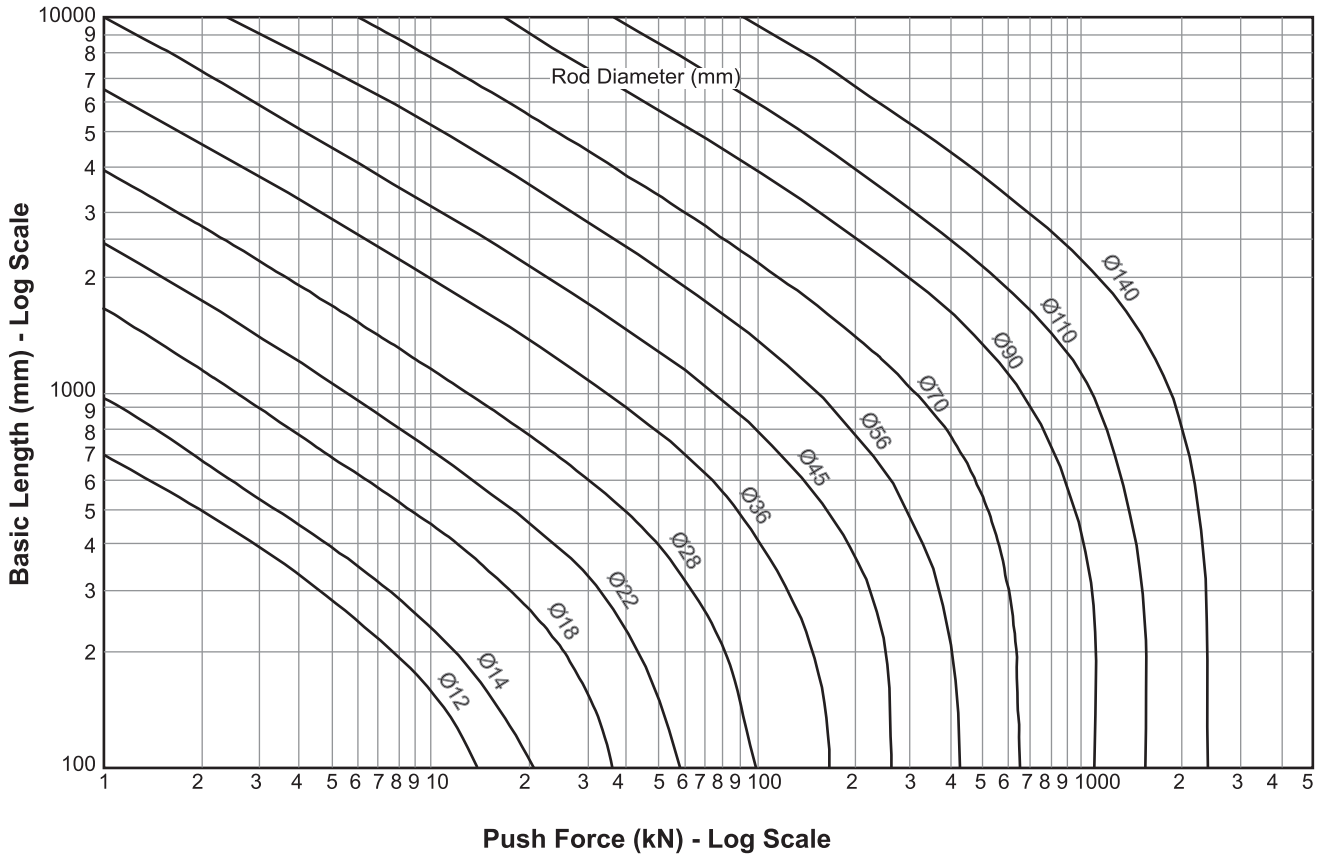

ACCESSORIES

ROD CLEVIS

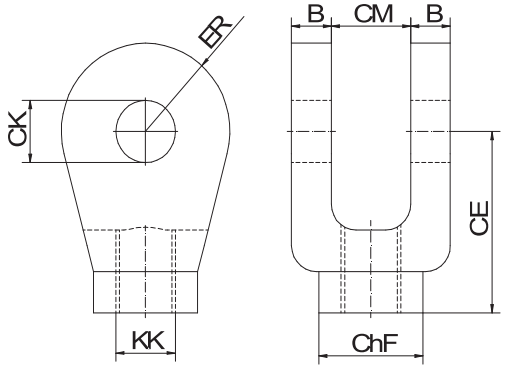

EYE BRACKET

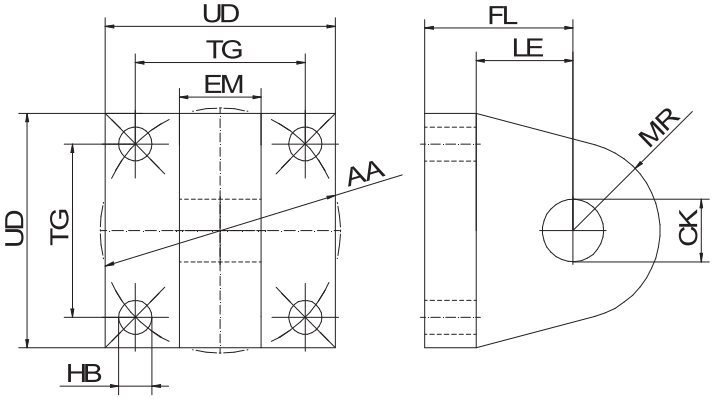

PLEIN ROD EYE

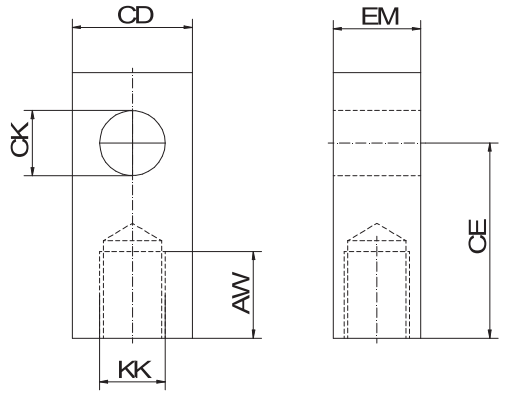

CLEVIS BRACKET

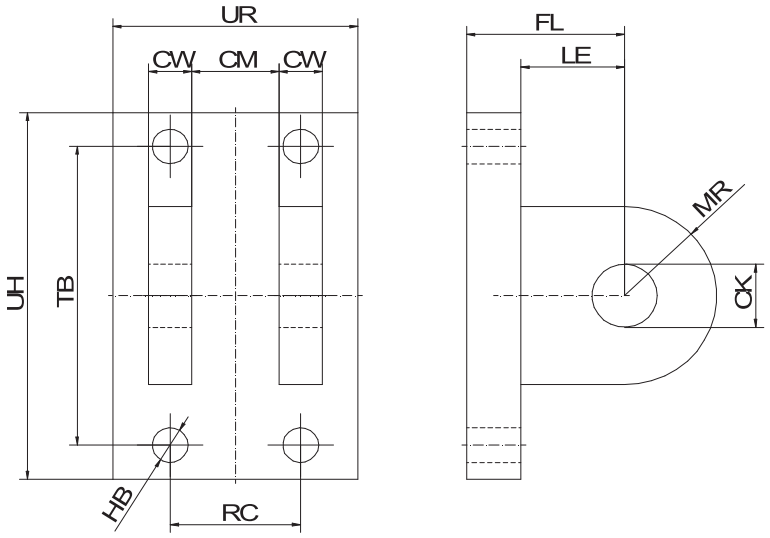

PIVOT PIN

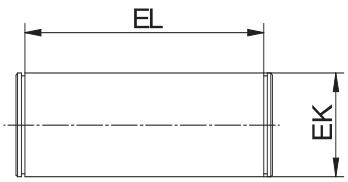

Thread KK	Rod clevis	Eye bracket (rod side)	Eye bracket (cap side)	Plein rod eye	Clevis bracket (rod side)	Clevis bracket (cap side)	Pivot pin
M 10x1,25	F 12	FLA 12	FLP 25	OF 12	ACA 12	ACP 25	P 12
M 12x1,25	F 14	FLA 14	FLP 32	OF 14	ACA 14	ACP 32	P 14
M 14x1,5	F 18	FLA 18	FLP 40	OF 18	ACA 18	ACP 40	P 18
M 16x1,5	F 22	FLA 22	FLP 50	OF 22	ACA 22	ACP 50	P 22
M 20x1,5	F 28	FLA 28	FLP 63	OF 28	ACA 28	ACP 63	P 28
M 27x2	F 36	FLA 36	FLP 80	OF 36	ACA 36	ACP 80	P 36
M 33x2	F 45	FLA 45	FLP 100	OF 45	ACA 45	ACP 100	P 45
M 42x2	F 56	FLA 56	FLP 125	OF 56	ACA 56	ACP 125	P 56
M 48x2	F 70	FLA 70	FLP 160	OF 70	ACA 70	ACP 160	P 70
M 64x3	F 90	FLA 90	FLP 200	OF 90	ACA 90	ACP 200	P 90

KK	AA	AW	B	CD	CE	ChF	CK H9	CM A16
M 10x1,25	40	14	6	18	32	19	10	12
M 12x1,25	47	16	8	22	36	21	12	16
M 14x1,5	59	18	10	25	38	21	14	20
M 16x1,5	74	22	15	35	54	32	20	30
M 20x1,5	91	28	15	40	60	32	20	30
M 27x2	117	36	20	50	75	40	28	40
M 33x2	137	45	25	70	99	55	36	50
M 42x2	178	56	30	100	113	56	45	60
M 48x2	219	63	35	112	126	75	56	70
M 64x3	269	85	40	140	168	95	70	80

KK	CW	EK	EL	EM h13	ER	FL	HB	LE
M 10x1,25	10	10	34	12	12	23	5,5	13
M 12x1,25	16	12	43	16	17	29	6,5	19
M 14x1,5	16	14	51	20	17	29	9	19
M 16x1,5	25	20	73	30	29	48	13,5	32
M 20x1,5	25	20	73	30	29	48	13,5	32
M 27x2	36	28	95	40	34	59	17,5	39
M 33x2	36	36	117	50	50	79	17,5	54
M 42x2	50	45	139	60	53	87	26	57
M 48x2	50	56	161	70	59	103	30	63
M 64x3	63	70	181	80	78	132	33	82

KK	MR	RC	TB	TG	UD	UH	UR
M 10x1,25	12	9	47	28,3	40	56	28
M 12x1,25	17	11	57	33,2	45	74	37
M 14x1,5	17	13,5	68	41,7	65	80	39
M 16x1,5	29	15,5	102	52,3	80	98	48
M 20x1,5	29	17,5	102	64,3	90	120	62
M 27x2	34	22	135	82,7	120	148	72
M 33x2	50	30	167	96,9	130	190	90
M 42x2	53	39	183	125,9	165	225	108
M 48x2	59	45	242	154,9	200	295	140
M 64x3	78	48	300	190,2	245	335	150

MOUNTING BRACKET

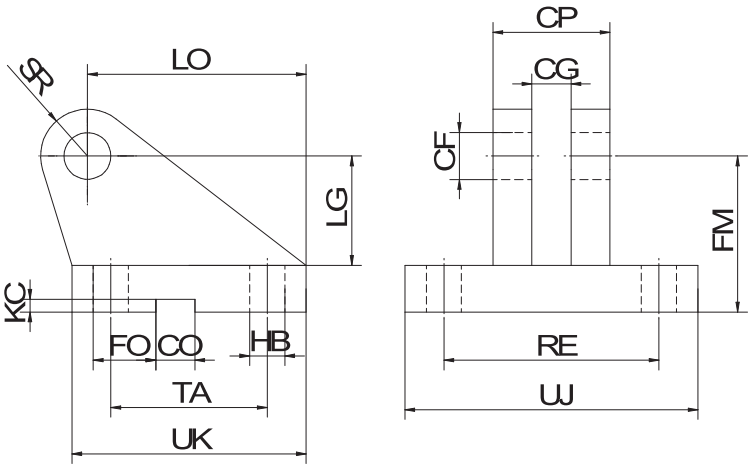

PIVOT PIN

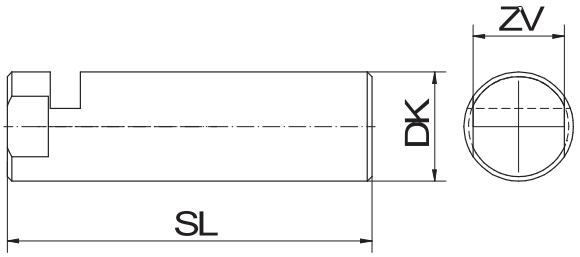

ROD EYE WITH SPHERICAL BEARING

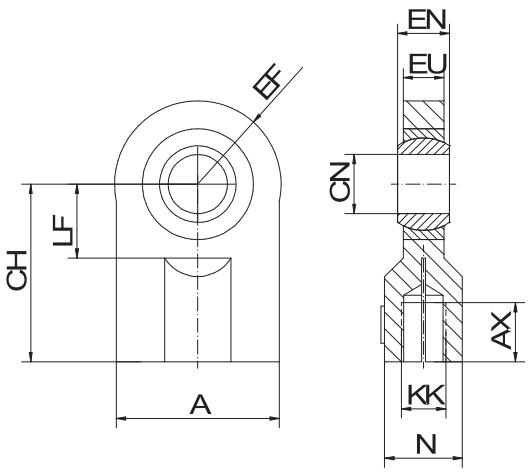

Thread KK	Mounting bracket (rod side)	Mounting bracket (cap side)	Pivot pin	Rod eye with spherical bearing
M 10x1,25	SAA 12	SAP 25	SP 12	SS 12
M 12x1,25	SAA 14	SAP 32	SP 14	SS 14
M 14x1,5	SAA 18	SAP 40	SP 18	SS 18
M 16x1,5	SAA 22	SAP 50	SP 22	SS 22
M 20x1,5	SAA 28	SAP 63	SP 28	SS 28
M 27x2	SAA 36	SAP 80	SP 36	SS 36
M 33x2	SAA 45	SAP 100	SP 45	SS 45
M 42x2	SAA 56	SAP 125	SP 56	SS 56
M 48x2	SAA 70	SAP 160	SP 70	SS 70
M 64x3	SAA 90	SAP 200	SP 90	SS 90

KK	CF K7	CG	CO	CP	FM	FO	GL	HB	KC	LG	LO	RE	SR	UJ	UK
M 10x1,25	12	10	10	30	40	16	40	9	3,3	28	56	55	12	75	60
M 12x1,25	16	14	16	40	50	18	55	11	4,3	37	74	70	16	95	80
M 14x1,5	20	16	16	50	55	20	58	13,5	4,3	39	80	85	20	120	90
M 16x1,5	25	20	25	60	65	22	70	15,5	5,4	48	98	100	25	140	110
M 20x1,5	30	22	25	70	85	24	90	17,5	5,4	62	120	115	30	160	135
M 27x2	40	28	36	80	100	24	120	22	8,4	72	148	135	40	190	170
M 33x2	50	35	36	100	125	35	145	30	8,4	90	190	170	50	240	215
M 42x2	60	44	50	120	150	35	185	39	11,4	108	225	200	60	270	260
M 48x2	80	55	50	160	190	35	260	45	11,4	140	295	240	80	320	340
M 64x3	100	70	63	200	210	35	300	48	12,4	150	335	300	100	400	400

KK	A	AX	CH	CN	DK	EF	EN	EU	LF	N	SL	ZV
M 10x1,25	40	15	42	12 -0,008	12	17,5	10 -0,12	8	16	17	40	10
M 12x1,25	45	17	48	16 -0,008	16	22,5	14 -0,12	11	20	21	50	13
M 14x1,5	55	19	58	20 -0,012	20	27,5	16 -0,12	13	28	25	62	17
M 16x1,5	62	23	68	25 -0,012	25	32,5	20 -0,12	17	31	30	72	22
M 20x1,5	77	29	85	30 -0,012	30	40	22 -0,12	19	35	36	85	24
M 27x2	90	37	105	40 -0,012	40	50	28 -0,12	23	45	45	100	32
M 33x2	105	46	130	50 -0,012	50	60	35 -0,12	30	58	55	122	41
M 42x2	134	57	150	60 -0,015	60	80	44 -0,15	38	68	68	145	50
M 48x2	156	64	185	80 -0,015	80	102,5	55 -0,15	47	82	90	190	70
M 64x3	190	86	240	100 -0,02	100	120	70 -0,20	55	116	110	235	90

TIE ROD NUTS TORQUE

For Concord Hydraulic cylinder's tie rods, lock nuts of minimum strength grade 10 are used and the tightening torque applied are :

BORE	TIE ROD DIAMETER	TIGHTENING TORQUE (Nm)
25	5	3,92
32	6	7,85
40	8	26,48
50	12	68,65
63	12	68,65
80	16	156,91
100	16	156,91
125	22	294,21
160	27	588,42
200	30	882,63

In case of long strokes, tie rod supports are provided. These help to minimize the curvature and the bucale of the tie rod.

SEALS

Seals should be chosen according to work conditions of the environment where the cylinder operates, paying particular attention to the fluid characteristics and the temperature. The table below shows the suggested material for the seals, according to the working conditions of the cylinder:

MATERIAL	CHARACTERISTICS	TEMPERATURE	FLUID
NBR + polyurethane	High performances in static/dynamic conditions	-30°C ÷ + 70°C	Mineral oil HH, HL, HLP, HLP -D, HM, HV
NBR + PTFE	Low friction	-30°C ÷ + 70°C	Mineral oil, HFA, HFC, HFD-U
FKM + PTFE	Low friction - High temperature	-20°C ÷ + 120°C	Mineral oil, HFA, HFB, HFD-U, HFD-R

SEALS KITS

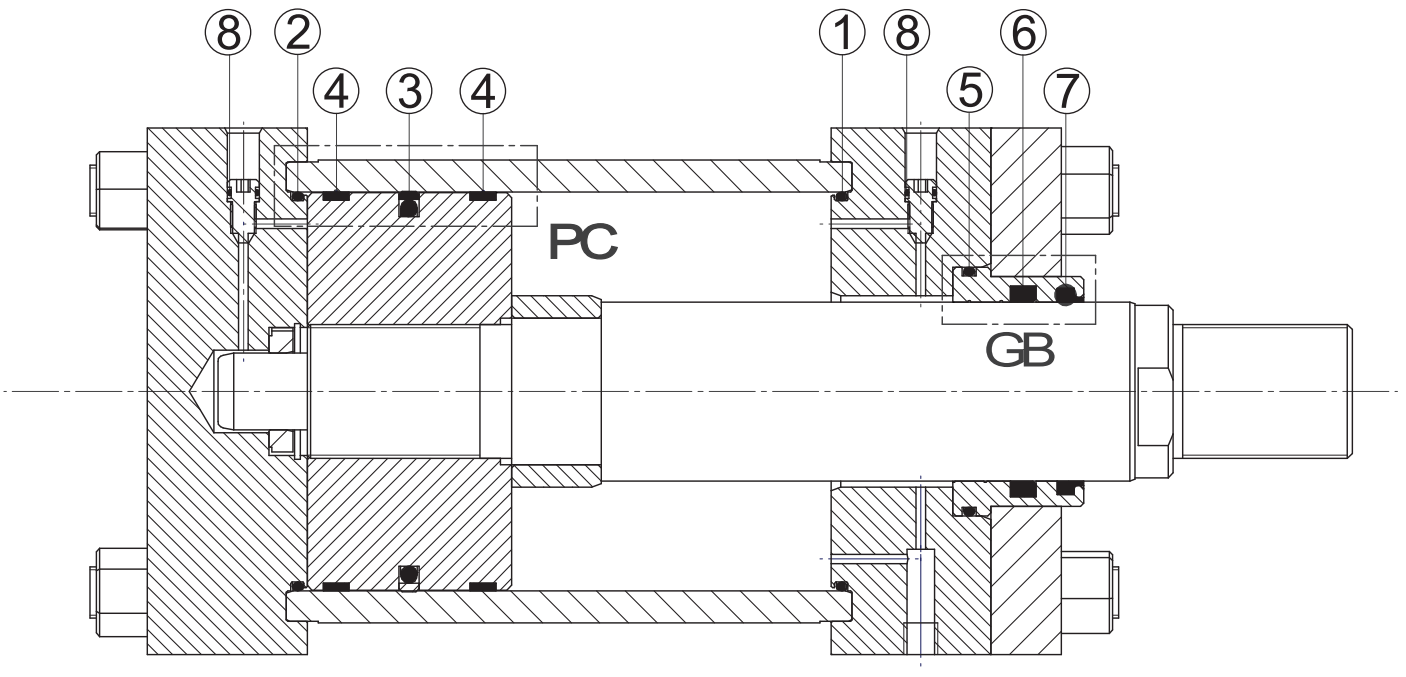

1 Head Seal
2 Cap Seal
3 Piston Seal
4 PTFE wear Ring
5 Gland O-Ring
6 Lip Seal
7 Wiper eal
8 Cushioning Valve with O-ring

HOW TO ORDER CONCORD HYDRAULIC CYLINDER - HX02 SERIES (ISO 6020/2)

HX02	080	036	0500	WC	TM	Mp5	S

BORE :

Specify Bore Ø in mm (indicate in 3 figures)

ROD :

Specify Rod Ø in mm (indicate in 3 figures)

STROKE :

Specify the Stroke length in mm (indicate in 4 figures)

CUSHIONING :

WC : Without Cushioning
FC : Front Cushioning
RC : Rear Cushioning
BC : Both End Cushioning

ROD END :

TM : MALE THREAD
TF : FEMALE THREAD
TS : Any other thread (specify separately spl. thread)

MOUNTING TYPE : (Please Refer to Page No. 3)

EH : tie rod extended head end
EC : tie rod extended cap end
EB : tie rod extended both ends
HRC: head rectangular flange
CRF : cap rectangular flange
LG : side lugs
CFE : cap fixed eye
CFC : cap fixed clevis
CF5 : cap fixed eye with spherical bearing
HT : head trunnion
BT : back trunnion
IFT : intermediate fixed trunnion

SPECIAL EXECUTIONS :

S : Indicate the change from the standard (see page 22)

SPECIAL EXECUTIONS (indicate the required special executions)

S = special executions

V	T	SA	SP	BT	ST	C



FMK seals

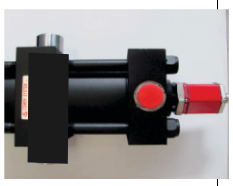

Linear transducer

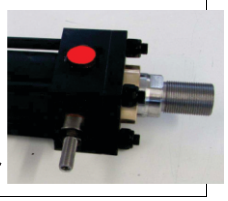

Head limit switch sensor

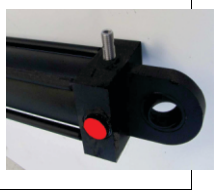

Cap limit switch sensor

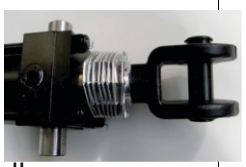

Heat resistant bellow

SPACER :

2 : 50 mm
4 : 100 mm
6 : 150 mm
8 : 200 mm

Stop tube lengths will be according to cylinder strokes & other designs can be supplied according to application requirements;

Connection ports (if not standard)

CONCORD

OUR OTHER PRODUCTS

HYDRAULIC CYLINDERS



HYDRAULIC POWER PACK & SYSTEMS

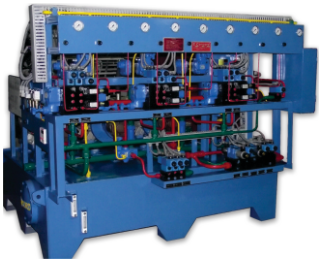



PORTABLE FILTRATION UNIT

PIPES FITTINGS, FLANGES AND CLAMPS



HYDRAULIC POWER PACKS



BLOCK ASSEMBLIES

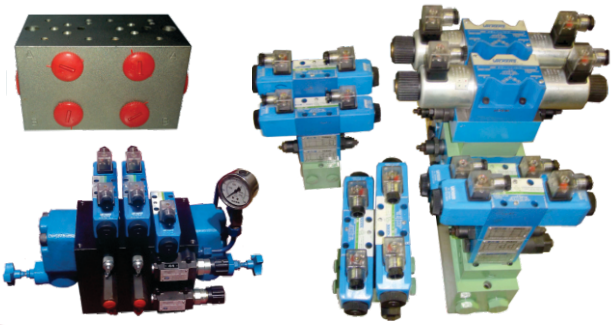

COMPONENTS, ACCESSORIES & SPARES

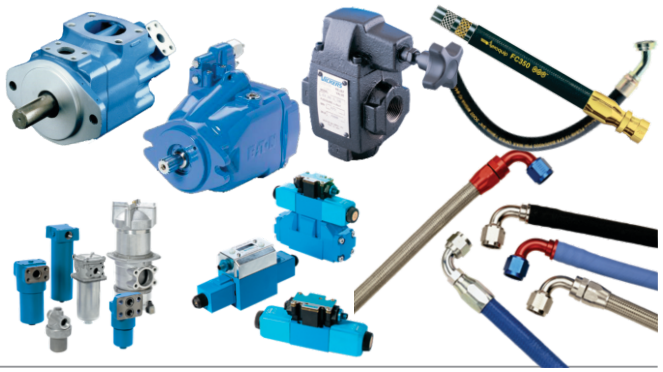





ACCUMULATOR STATION



HYDRAULIC VALVE STANDS

INSTALLATION AND COMMISSIONING





CONCORD
Hydraulics Pvt. Ltd.
ISO : 9001 - 2008 CERTIFIED

HEAD OFFICE
5/73, Ashirwad Industrial Estate, Ram Mandir Road,
Goregaon (W), Mumbai - 400 104.
Ph : 022-26763772 | 022-26794705

MANUFACTURING UNITS
Unit No.15/16, Sheetal Shrusti Indl. Estate,
Bialalpada, Vasai (E) - 401 208,
Dist. Thane, Maharashtra, INDIA
Ph : +91-0250-6450331/6450674/6069100

Plot No. A3, Sector - 1,
The Vasai Taluka Indl. Co-Op. Estate Ltd.,
Gauraipada Road, Village - Bilalpada,
Vasai (E) - 401 208, Dist. Thane, Maharashtra, INDIA
Ph : +91-0250-2450038

Email: support@concordhydraulics.com | concordhydraulic@gmail.com
convasai@gmail.com | sales@concordhydraulics.com

Web : www.concordhydraulics.com

Follow us on :