Hydraulic Cylinders

HX 01 as per ISO 6020/1 (160 bar) series



CONCORD

CONCORD
Hydraulics Pvt. Ltd.
ISO : 9001 - 2008 CERTIFIED

CONCORD HYDRAULICS PVT. LTD. was established in the year 1982 at MUMBAI, with Erection and commissioning of Hydraulic systems as prime objective. Company is under able control of Technocrats having decades of association with the Pioneers in Oil Hydraulic industry in INDIA today. Company has grown since then and has progressed successfully in serving major core sector industries like Steel plants, Machine tools, Marine, Defence Organisation and many others.

Company have modern facilities and group of highly skilled technical staff to cater for all the important and technically challenging requirements of today's modern industry for design manufacturing of HYDRAULIC SYSTEMS, ERECTION and COMMISSIONING of High pressure and High flow hydraulic systems. Company also manufactures all types of tailor made Hydraulic and lubrication systems with components makes of your choice (Eaton-Vickers / Rexroth / Yuken / etc).

To cater for the all round requirement of industry under one roof, Company has diversified into various product range & started design and manufacturing of hydraulic and pneumatic cylinders in a separate factory also started small branches with various specialised services.

CONTENTS:

General Features 01
Mounting styles 03
Piston rod end charactersitics 04
Single rod cylinder dimensions 06
Double rod cylinder dimensions 09
Port types 10
Port and cushion adjustment location 10
Rod piston diameter selection 11
Accessories 13
Tie rod nuts torque 16
Seals 17
How to order Concord Hydraulic cylinder 18
Special options 19

DEFINITIONS :

CYLINDER : Appliance which transforms fluid Energy in mechanical force and Rectilinear motion.

CYLINDER BORE: Cylinder internal diameter.

PISTON ROD: Tool which transforms mechanical force and piston movement.

MOUNTING TOOL: Appliance to anchor the cylinder.

Hydraulic Cylinders
HX 01 as per ISO 6020/1 (160 bar) series

CONCORD

Hydraulic cylinders ISO 6020/1

Standard construction according to ISO 6020/1

Work pressure 160 BAR

11 bore sizes

24 rod diameters

6 mounting styles

Optional cushioning at the head and cap

Stroke untill 6000 mm

Male or female thread rod ends

Rounded head and cap

Standard BSP port connections, if required we can supply NPTF threaded ports or flange ports SAE.

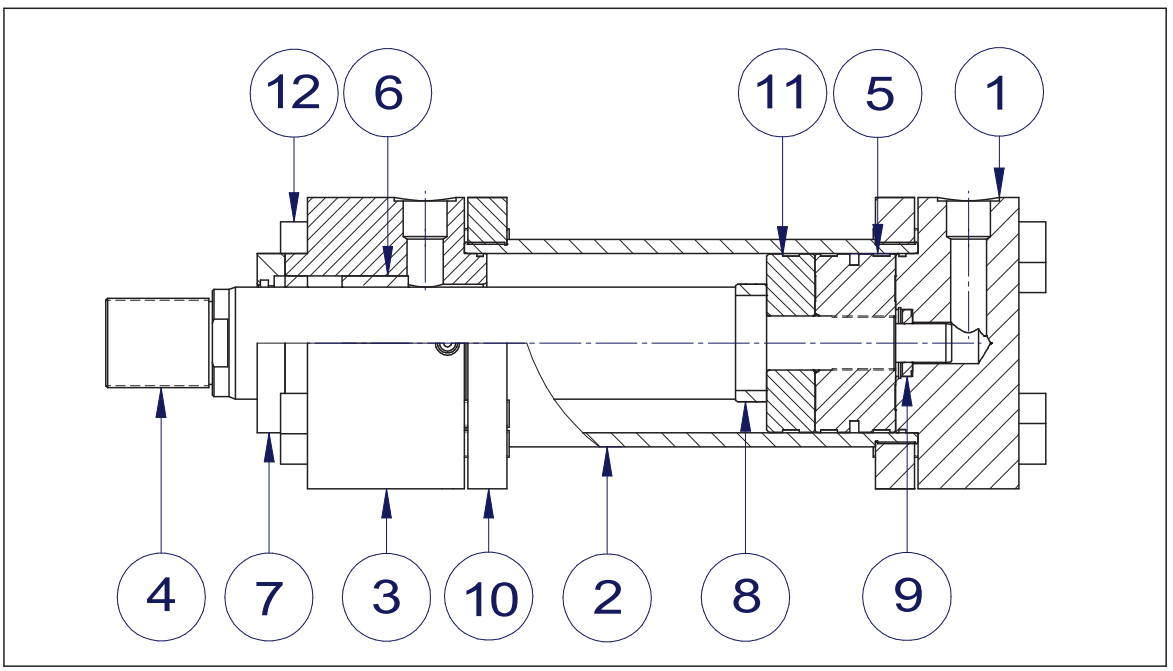

1 Cap

2 Cylinder body

3 Head

4 Piston rod

5 Piston

6 Bronze rod gland

7 Front flange

8 Front cushioning

9 Back cushioning

10 Retention

11 Stop tube for piston

12 Screw

CONCORD

CYLINDER BODY

High quality steel tube, cold wide drawing and yield point to 45 kg/mm^2 .
Internal high surface finish, max roughness 0,25 µ.

PISTON ROD

High quality steel, polished and chrome plated,diameter tolerance *f* 7and roughness 0,2 µ.
If required we can provide with special materials.

HEAD AND CAP ENDS

Made in steel, high level of precision to ensure maximum concentricity between them and the cylinder body.

PISTON

One-piece type, high quality steel. Particular attention for the concentricity, to ensure a good working for the seals.

SEALS

High quality gland, piston, head and cap ends sealsin nitrile (NBR), PTFE and polyurethane, compatible with the work fluid, temperature range between –10° + 90°C, max speed 0,6 m/s. If required, related to the work conditions, we can supply cylinders with fluorocarbon elastomer (FPM), PTFE or special mixture.

CUSHIONING

All cylinders can be provided with cushioning at the head and cap end, with progressive and controller deceleration. Valves are provided at both ends, to permit a precise cushion adjustment.

LIMITED STROKE

When the stroke is particularly long.
The recommended lenght is:
50 mm for strokes between 1000÷1500 mm
100 mm for strokes between 1500÷2000 mm
150 mm for strokes between 2000÷2500 mm
For longer strokes please contact our technical office.

CONCORD

MOUNTING STYLES

ISO 6020/1 mounting styles are :

-MS2: side lugs
-MF3: head round flange
-MF4: cap round flange
-MP3: cap fixed eye
-MP5: cap fixed eye with spherical bearing
-MT4: intermediate fixed trunnion.

In addition, it is possible to supply MS2 mounting style: side lugs not ascribed in ISO 6020/1 standards.

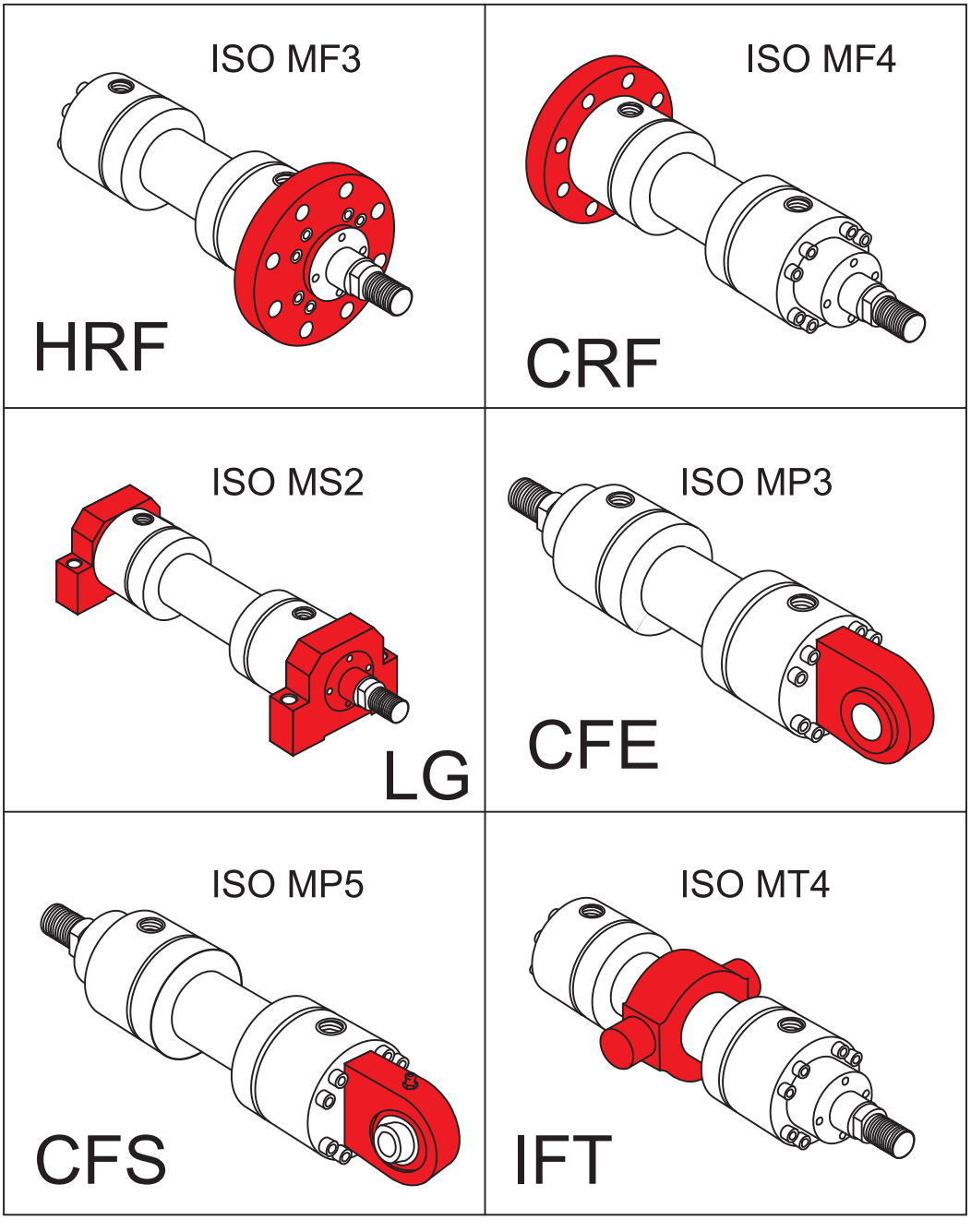

CONCORD

PISTON ROD END CHARACTERISTICS

MALE THREAD (M)

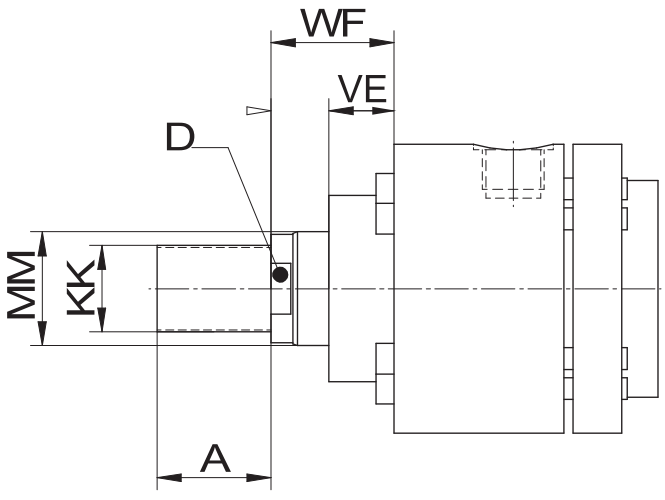

FEMALE THREAD (F)

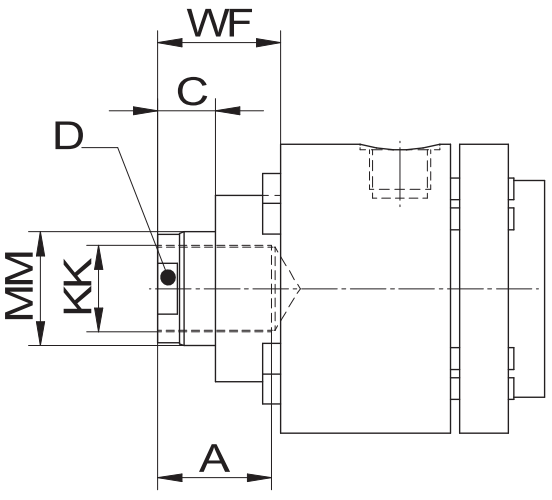

Bore Ø	MM	KK	A	WF	C	D
40	22/28	M16 x 1.5	22	32	19	18/22
50	28/36	M20 x 1.5	28	38	24	22/30
63	36/45	M27 x 2	36	45	29	30/39
80	45/56	M33 x 2	45	54	36	39/48
100	56/70	M42 x 2	56	57	37	48/62
125	70/90	M48 x 2	63	60	37	62/80
160	90/100	M64 x 3	85	66	41	80/100
200	110/140	M80 x 3	95	75	45	100/128
250	140/180	M100 x 3	112	96	64	128/Ø15x4
320	180/220	M125 x 4	125	108	71	Ø15x4/Ø15x4

Piston rod thread

Special thread:
If a different rod end thread is required, indicate the S in the cylinder, pointing the value of the required thread.

CONCORD

SINGLE ROD CYLINDER DIMENSIONS

ISO MF3 - Head Round Flange

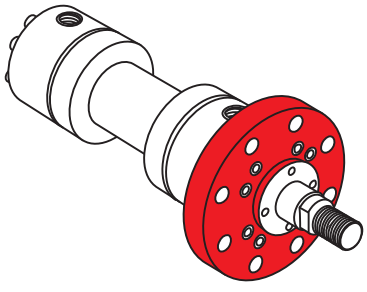

HRF

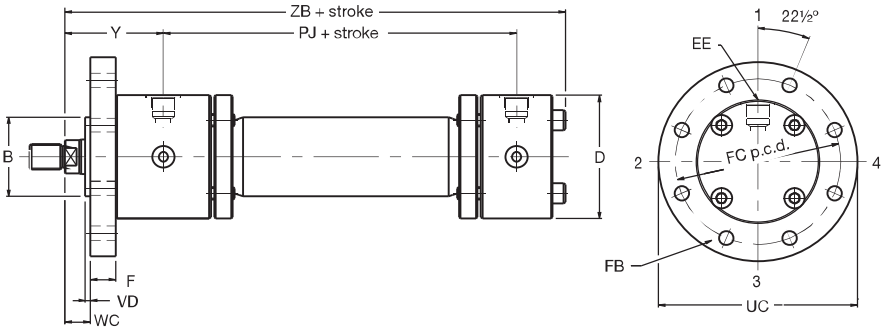

ISO MF4 - Cap Round Flange

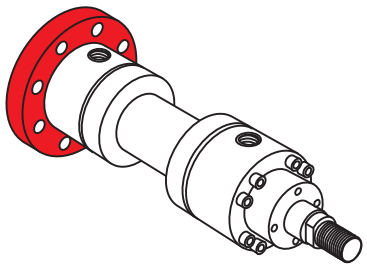

CRF

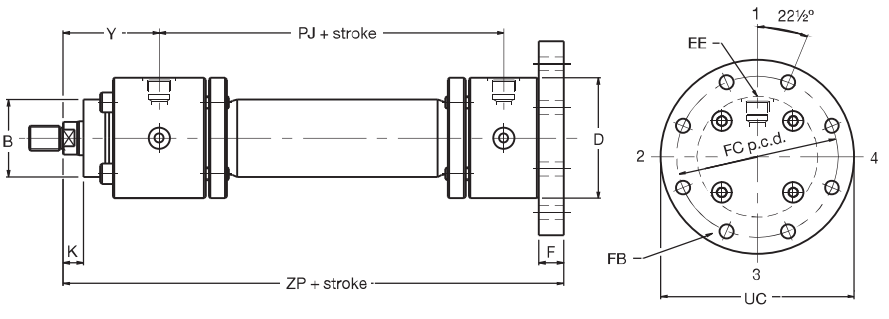

Bore Ø	MM	B/ BA	D	EE	F	FB	FC	PJ	UC	VD	WC	Y	ZJ	ZP
40	22/28	50	78	G½	16	9	106	97	125	3	16	71	198	206
50	28/36	60	95	G½	20	11	126	111	148	4	18	72	213	225
63	36/45	70	116	G¾	25	13.5	145	117	170	4	20	82	236	249
80	45/56	85	130	G¾	32	17.5	165	134	195	4	22	91	362	282
100	56/70	106	158	G1	32	22	200	162	238	5	25	108	314	332
125	70/90	132	192	G1	32	22	235	174	272	5	28	121	341	357
160	90/110	160	232	G1¼	36	22	280	191	316	5	30	143	386	406
200	110/140	200	285	G1¼	40	26	340	224	385	5	35	190	466	490
250	140/180	250	365	G1½	56	33	420	290	500	8	40	205	570	606
320	180/220	320	450	G1½	63	39	520	358	600	8	45	250	684	723

CONCORD

ISO MP3 - Cap Fixed Eye

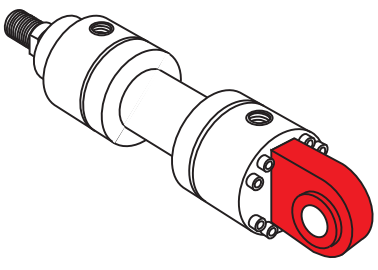

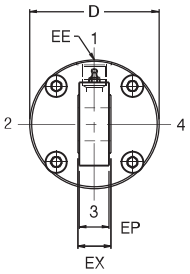

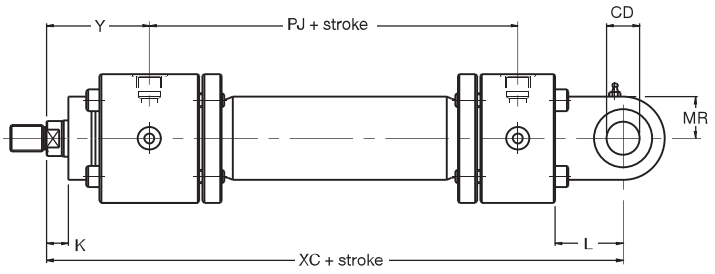

CFE

ISO MP5 - Cap Fixed Eye with Spherical Bearing

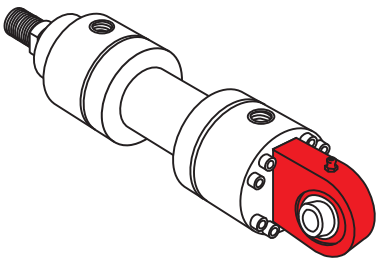

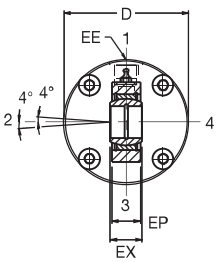

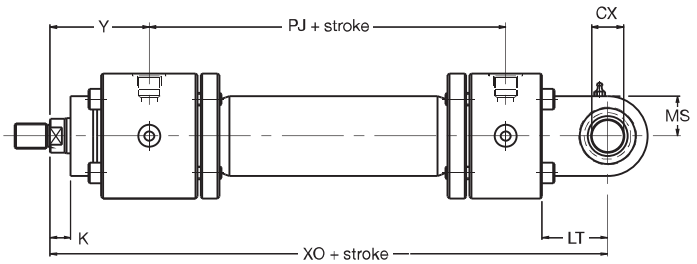

CFS

Bore Ø	CD CX	D	EE	EW	L LT	MR MS	PJ	XC XO	Y	EX
40	20	78	G½	18	41	25	97	231	71	20
50	25	95	G½	22	52	32	111	257	72	25
63	32	116	G¾	27	65	40	117	289	82	32
80	40	130	G¾	35	82	50	134	332	91	40
100	50	158	G1	40	95	63	162	395	108	50
125	63	192	G1	52	103	71	174	428	121	63
160	80	232	G1¼	66	135	90	191	505	143	80
200	100	285	G1¼	84	165	112	224	615	190	100
250	125	365	G1½	102	223	160	290	773	205	125
320	160	450	G1½	130	270	200	358	930	250	160

CONCORD

ISO MS2 - Side Lugs

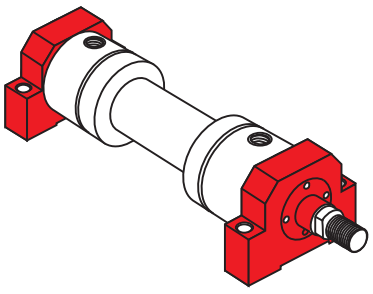

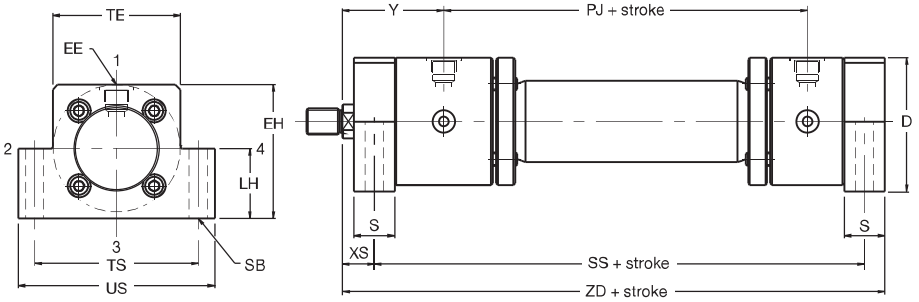

LG

ISO MT4 - Intermediate Fixed Trunnion

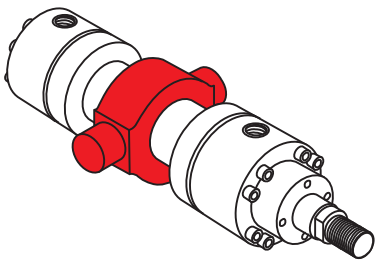

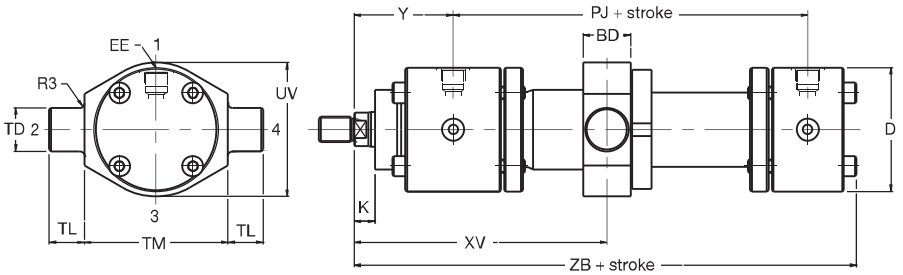

IFT

Bore Ø	BD	D TE	SB	TD	LT	TM	TS	US	UV	XS	PJ	SS	XV	ZB	ZD
40	30	78	11	20	16	90	100	120	78	19.5	97	183	93	198	215
50	35	95	14	25	20	105	120	145	95	22	111	199	102	213	237
63	45	116	18	32	25	120	150	180	116	29	117	211	107	236	256
80	50	130	22	40	32	135	170	210	130	34	134	236	122	262	290
100	60	158	26	50	40	160	205	250	158	32	162	293	152	314	350
125	75	192	33	63	50	195	245	300	195	32	174	321	157	341	381
160	90	232	33	80	63	240	295	350	240	36	191	364	177	386	430
200	110	285	39	100	80	295	350	415	390	39	224	447	267	466	522
250	135	365	-	125	100	370	-	-	480	-	290	-	298	570	-
320	175	450	-	160	125	470	-	-	600	-	358	-	370	684	-

CONCORD

PORTS TYPES

Concord Hydraulics cylinders are supplied with BSP Standard threaded ports, according to ISO 6020/1. If required, we can provide metric threaded ports, NPTF, SAE 6000.

Bore	BSP threaded ports	Metric threaded ports	NPTF ports	Ports with flange SAE 6000
50	G1/2	M22x1,5	NPTF 1/2	SAE 6000 - 1/2
63	G3/4	M27x2	NPTF 3/4	SAE 6000 - 3/4
80	G3/4	M27x2	NPTF 3/4	SAE 6000 - 3/4
100	G1	M33x2	NPTF 1	SAE 6000 - 1
125	G1	M33x2	NPTF 1	SAE 6000 - 1
140*	G1-1/4	M42x2	NPTF 1-1/4	SAE 6000 - 1-1/4
160	G1-1/4	M42x2	NPTF 1-1/4	SAE 6000 - 1-1/4
180*	G1-1/4	M42x2	NPTF 1-1/4	SAE 6000 - 1-1/4
200	G1-1/4	M42x2	NPTF 1-1/4	SAE 6000 - 1-1/4
250	G1-1/2	M48x2	NPTF 1-1/2	SAE 6000 - 1-1/2
320	G2	M60x2	NPTF 2	SAE 6000 - 2

If required it is possible to provide cylinders with oversize ports. In these cases, cylinder dimensions can change. For more informations, customer should contact our technical department.

PORTS AND CUSHION ADJUSTMENT LOCATION

The table below shows standard positions of the ports and the cushion adjustment for Concord Hydraulics cylinders. All cylinders are provided with air-bleed.

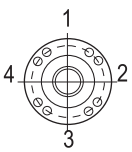

		Mounting style			
		C-D	E	F-H	M
Head	Connection port	1	1	1	1
	Cushion	2	2	2	2
	Check valve	4	4	4	4
	Air bleed	3	3	3	3
Cap	Connection port	1	1	1	1
	Cushion	2	2	2	2
	Check valve	4	4	4	4
	Air bleed	3	3	3	3

If limit switch sensors are required, the locations indicate above can change, according to customer specifications.

ROD PISTON DIAMETER SELECTION

When the cylinder works in pushing it is suggested to verify if the peak load is adequate. To do this, the steps are the followings. The first thing is to determine the constant k, related to the mounting style that is required:

Type of Mounting	Stroke Factor
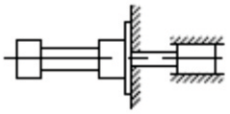	0.5
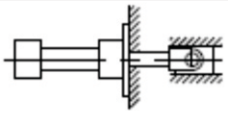	0.7
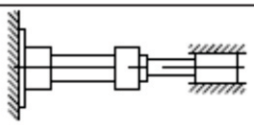	1.0
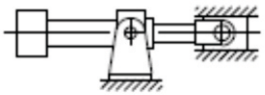	1.0
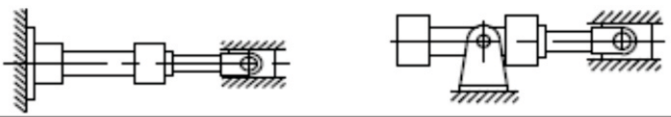	1.5
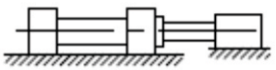	2.0
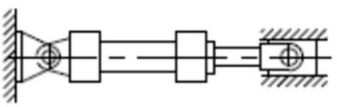	2.0
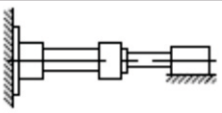	4.0
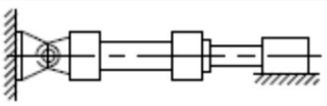	4.0

Calculate the basic length L:

$$L = k * \text{stroke}$$

Calculate the thrust by multiplying the bore area per the work pressure.

CONCORD

Push Force

Bore Ø	Bore Area mm²	Cylinder Push Force in kN					
		10 Bar	40 Bar	63 Bar	100 Bar	125 Bar	160 Bar
40	1257	1.3	5.0	7.9	12.6	15.7	20.1
50	1964	2.0	7.9	12.4	19.6	24.6	31.4
63	3118	3.1	12.5	19.6	31.2	39.0	49.9
80	5027	5.0	20.1	31.7	50.3	62.8	80.4
100	7855	7.9	31.4	49.5	78.6	98.2	126
125	12272	12.3	49.1	77.3	123	153	196
160	20106	20.1	80.4	127	201	251	322
200	31416	31.4	126	198	314	393	503
250	49087	49.1	196	309	491	614	785
320	80425	80.4	322	507	804	1005	1287

Deduction for Pull Force

Rod Ø	Rod Area mm²	Reduction in Force in kN					
		10 Bar	40 Bar	63 Bar	100 Bar	125 Bar	160 Bar
22	380	0.4	1.5	2.4	3.8	4.8	6.1
28	616	0.6	2.5	3.9	6.2	7.7	9.9
36	1018	1.0	4.1	6.4	10.2	12.7	16.3
45	1590	1.6	6.4	10.0	15.9	19.9	25.5
56	2463	2.5	9.9	15.6	24.6	30.8	39.4
70	3848	3.8	15.4	24.2	38.5	48.1	61.6
90	6362	6.4	25.5	40.1	63.6	79.6	102
110	9503	9.5	38.0	59.9	95.1	119	152
140	15394	15.4	61.6	97.0	154	193	246
180	25447	25.4	102	160	254	318	407
220	38013	38.0	152	240	380	475	608

Interpolating L with the thrust calculate before, it's possible to define the point of intersection, from the following chart.

Piston Rod Selection Chart

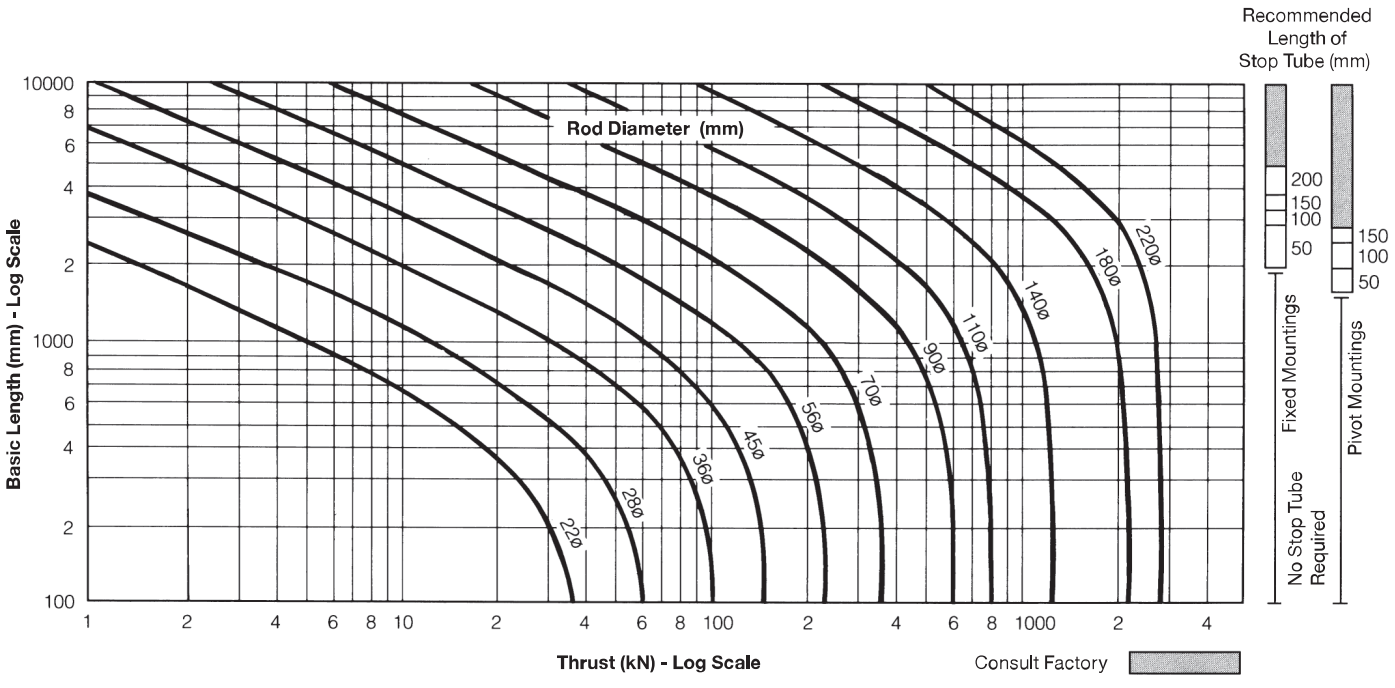

CONCORD

ACCESSORIES

Rod Clevis and Pivot Pin

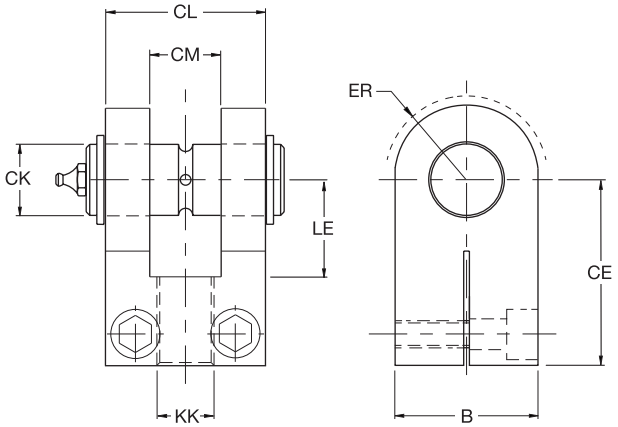

B	CE js13	CK H9/f8	CL h16	CM A13	ER max	KK	LE min	Mass kg	Force kN
65	80	32	70	32	40	M27x2	41	2.2	50
80	97	40	90	40	50	M33x2	51	4.4	80
100	120	50	110	50	63	M42x2	63	7.6	125
120	140	63	140	63	71	M48x2	75	17.7	200
140	180	80	170	80	90	M64x3	94	30.6	320

Rod Eye with Spherical Bearing

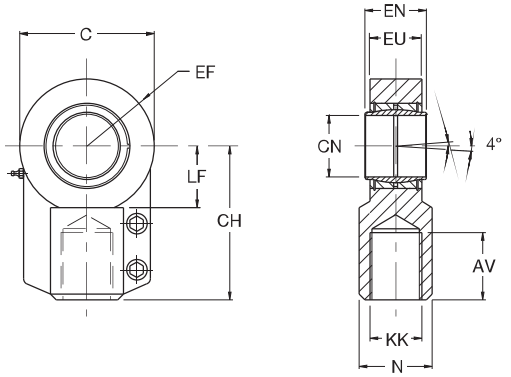

AV min	C max	CH js13	CN H7	EF max	EN h12	EU max	KK	LF min	N max	Mass kg	Force kN
37	70	80	32	40	32	28	M27x2	30	38	1.2	50
46	89	97	40	50	40	34	M33x2	39	47	2.1	80
57	108	120	50	63	50	42	M42x2	47	58	4.4	125
64	132	140	63	72.5	63	53.5	M48x2	58	70	7.6	200
86	168	180	80	92	80	68	M64x3	74	91	14.5	320
96	210	210	100	114	100	85.5	M80x3	94	110	28	500
113	262	260	125	160	125	105	M100x3	116	135	43	800
126	326	310	160	200	160	133	M125x4	145	165	80	1250

CONCORD

Clevis Bracket and Pivot Pin

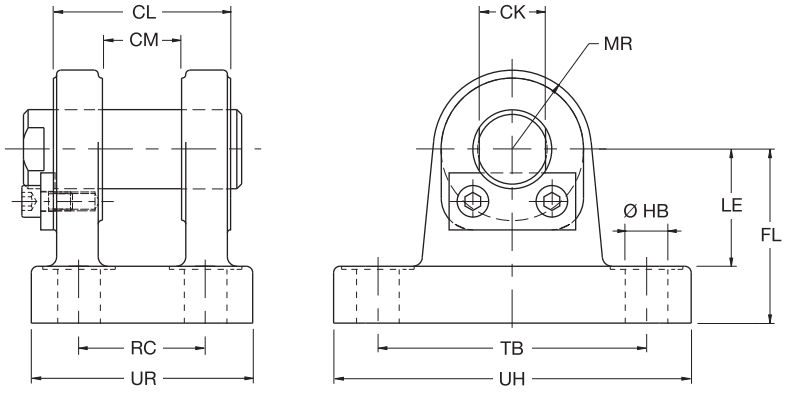

CK H9/m6	CL h16	CM A13	FL JS12	HB H13	LE min	MR max	RC JS14	TB JS14	UH max	UR max	Mass kg	Force kN
32	70	32	65	17.5	43	32	50	110	143	85	3.5	50
40	90	40	76	22	52	40	65	130	170	108	6	80
50	110	50	95	26	65	50	80	170	220	130	12	125
63	140	63	112	33	75	63	100	210	270	160	19	200
80	170	80	140	39	95	80	125	250	320	210	38	320

Mounting Bracket and Pivot Pin

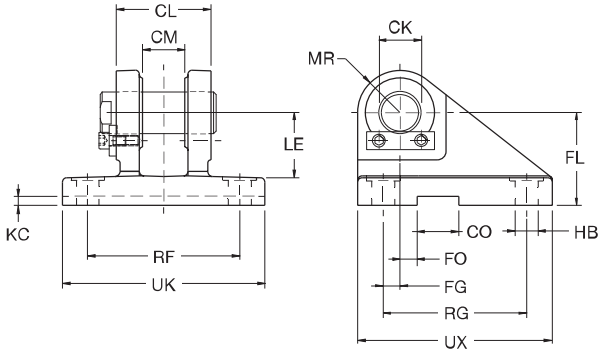

CK H9/m6	CL h16	CM A13	CO N9	FG JS14	FL js13	FO JS14	HB H13	KC +0.3	LE min	MR max	RF js13	RG js13	UK max	UX max	Mass kg	Force kN
32	70	32	25	14.5	65	6	17.5	5.4	43	32	110	110	145	145	5	50
40	90	40	36	17.5	76	6	22	8.4	52	40	140	125	185	170	9.6	80
50	110	50	36	25	95	–	26	8.4	65	50	165	150	215	200	15.5	125
63	140	63	50	33	112	–	33	11.4	75	63	210	170	270	230	27.5	200
80	170	80	50	45	140	–	39	11.4	95	80	250	210	320	280	47	320

HOW TO ORDER CONCORD CYLINDERS ?

PLEASE PROVIDE ALL INFORMATION CORRECTLY AS REQUIRED .
TICK MARK √ WHICHEVER IS APPLICABLE.

1. CYLINDER TYPE REQUIRED - DOUBLE ACTING / SINGLE ACTING / RAM TYPE

2. CYLINDER TYPE REQUIRED - DOUBLE ROD / SINGLE ROD

3. CYLINDER CONSTRUCTION TYPE REQUIRED - WELDED / TIE-ROD

4. CYLINDER WORKING POSITION - VERTICAL / HORIZONTAL / INCLINED

5. CYLINDER MAXIMUM WORKING PRESSURE - _____ Kg / Cm^2

6. TYPE & MAGNITUDE OF LOADING - PUSH / PULL / BOTH , PUSH LOAD _____KG / PULL LOAD_____KG.

7. CYLINDER BORE SIZE - SPECIFY IN CM _____ / CHPL TO SELECT

8. CYLINDER ROD SIZE - SPECIFY IN CM _____ / CHPL TO SELECT

9. CYLINDER STROKE - _____ CM

10. CYLINDER MAXIMUM WORKING SPEED - _____CM / Min (in load direction)

11. CYLINDER MAXIMUM WORKING SPEED - _____CM / Min (in return stroke)

12. CYLINDER OIL CONNECTIONS - _____ / CHPL TO SELECT

13. CYLINDER MOUNTING TYPE REQUIRED - FOOT MOUNTING / FRONT FLANGE / REAR FLANGE / MID TRUNNION / MALE CLEVIS ON BOTH ENDS / FEMALE CLEVIS ON BOTH ENDS / PL.SPECIFY IF ANY OTHER TYPE

14. ROD END TYPE –THREADED - THREAD SIZE x LENGTH =_____ x ___ MM

OR

MALE CLEVIS ON ROD END / FEMALE CLEVIS ON ROD END/ PL.SPECIFY IF ANY SPECIAL MOUNTING .

15. MOUNTING DIMENSIONS - DIMENSIONAL DETAILS PROVIDED ALONG WITH THIS SHEET / AS PER ANY KNOWN STANDARD _____ / AS CHPL STANDARD

16. CYLINDER APPLICATION - FOR NEW MACHINERY / REPLACEMENT / REVAMP / INDUSTRIAL / MOBILE / MARINE /IF SPECIAL SPECIFY

17. SPECIFY TEMP. CONDITIONS - OIL _____°C / AMBIENT _____°C

CONCORD

HOW TO ORDER CONCORD HYDRAULIC CYLINDER - HX01 SERIES (ISO 6020/1)

HX01	*080*	*036*	*0500*	*WC*	*TM*	*LG*	*S*

BORE :

Specify Bore Ø in mm (indicate in 3 figures)

ROD :

Specify Rod Ø in mm (indicate in 3 figures)

STROKE :

Specify the Stroke length in mm (indicate in 4 figures)

CUSHIONING :

WC : Without Cushioning
FC : Front Cushioning
RC : Rear Cushioning
BC : Both End Cushioning

ROD END :

TM : MALE THREAD
TF : FEMALE THREAD
TS : Any other thread (specify separately spl. thread)

MOUNTING TYPE : (Please Refer to Page No. 3)

LG : side lugs
HRE : head round flange
CRF : cap round flange
CFE : cap fixed eye
CFS : cap fixed eye with spherical bearing
IFT : intermediate fixed trunnion.

SPECIAL EXECUTIONS :

S : Indicate the change from the standard (see page 19)

CONCORD

SPECIAL EXECUTIONS (indicate the required special executions)

S = special executions

V	T	SA	SP	BL	ST	C



FMK seals

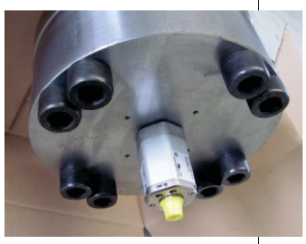

Linear transducer

Head limit switch sensor

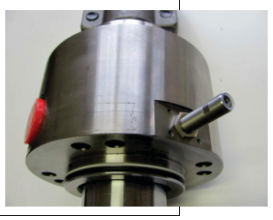

Cap limit switch sensor

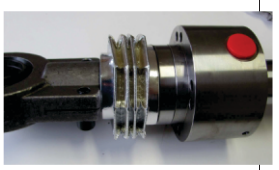

Heat resistant bellow

SPACER :

2 : 50 mm
4 : 100 mm
6 : 150 mm
8 : 200 mm

Stop tube lengths will be according to cylinder strokes & other designs can be supplied according to application requirements;

Connection ports (if not standard)

CONCORD

OUR OTHER PRODUCTS

HYDRAULIC CYLINDERS



HYDRAULIC POWER PACK & SYSTEMS

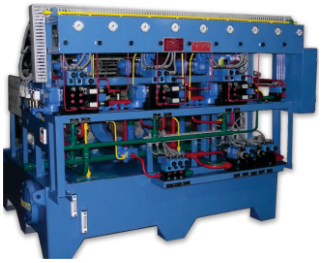



PORTABLE FILTRATION UNIT

PIPES FITTINGS, FLANGES AND CLAMPS



HYDRAULIC POWER PACKS



BLOCK ASSEMBLIES

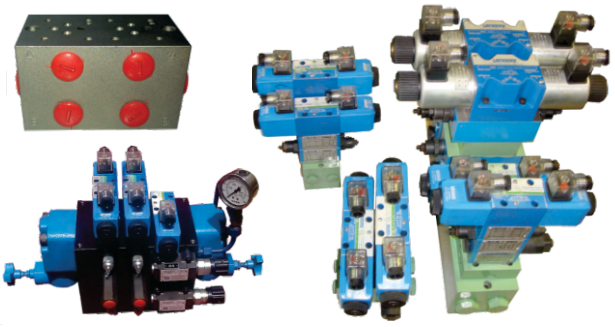

COMPONENTS, ACCESSORIES & SPARES

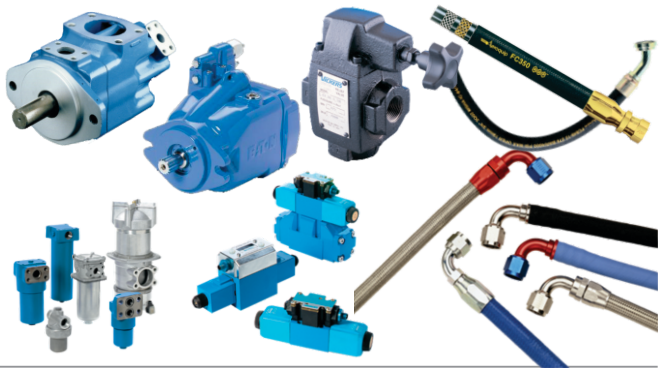





ACCUMULATOR STATION



HYDRAULIC VALVE STANDS

INSTALLATION AND COMMISSIONING





CONCORD
Hydraulics Pvt. Ltd.
ISO : 9001 - 2008 CERTIFIED

HEAD OFFICE
5/73, Ashirwad Industrial Estate, Ram Mandir Road,
Goregaon (W), Mumbai - 400 104.
Ph : 022-26763772 | 022-26794705

MANUFACTURING UNITS
Unit No.15/16, Sheetal Shrusti Indl. Estate,
Bialalpada, Vasai (E) - 401 208,
Dist. Thane, Maharashtra, INDIA
Ph : +91-0250-6450331/6450674/6069100

Plot No. A3, Sector - 1,
The Vasai Taluka Indl. Co-Op. Estate Ltd.,
Gauraipada Road, Village - Bilalpada,
Vasai (E) - 401 208, Dist. Thane, Maharashtra, INDIA
Ph : +91-0250-2450038

Email: support@concordhydraulics.com | concordhydraulic@gmail.com
convasai@gmail.com | sales@concordhydraulics.com

Web : www.concordhydraulics.com

Follow us on :